Operating and maintenance instructions

Liquid-cooled IEC squirrel cage rotor motors/generators
Liquid-cooled ex-protected motors
Liquid-cooled brake motors
Liquid-cooled permanent magnet synchronous motors/generators

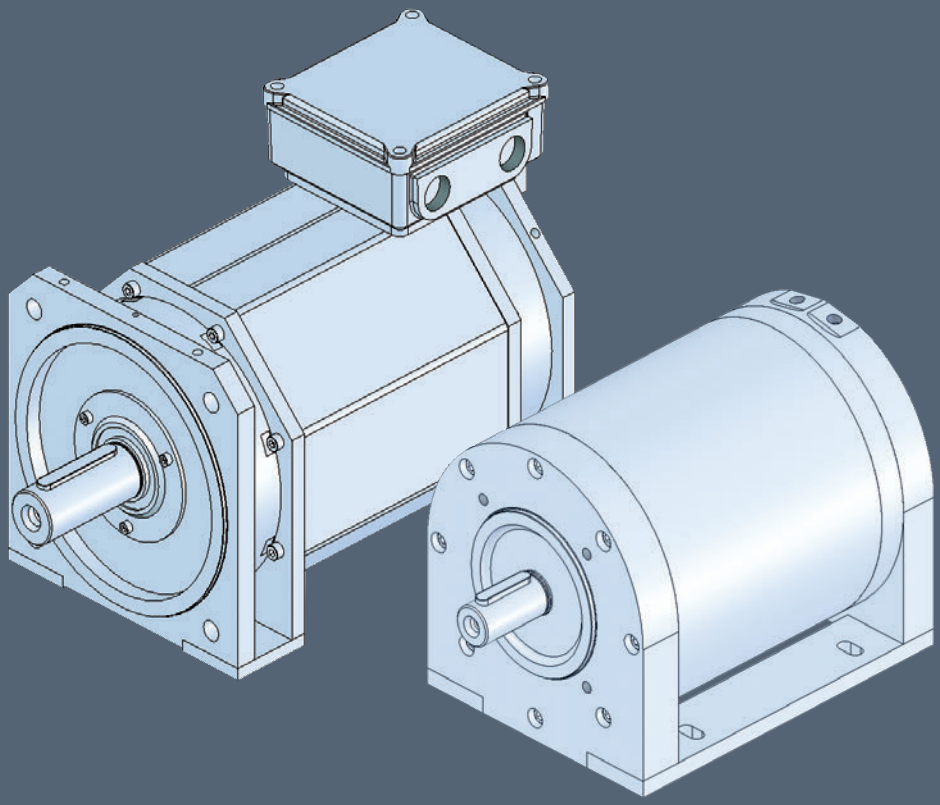

Elektromotorenwerk Brienz AG
Mattenweg 1
CH-3855 Brienz
Tel: +41 (0)33 952 24 24
Fax: +41 (0)33 952 24 00
info@emwb.ch
www.emwb.ch

Edition: 05.2019
80000231A

Revision:

Version-No.	Edition	Description	Issued	Approved
V1.10en	02.05.2016	Final version	DOG/Kla	EMWB TM
V1.20en	16.05.2019	Declaration of conformity	DOG/Rud	EMWB TM

Table of Contents

1 Introduction

1.1 About these instructions

These operating and maintenance instructions inform you on the handling of the motors, from their delivery up to their disposal. Store these instructions for future reference.

Read and follow the operating instructions before handling the motor. This ensures risk-free, smooth function and a long lifetime of the motor.

The shop papers are enclosed with each motor in addition to these operation instructions. These are binding and always have higher priority.

If you have any suggestions on how to improve this document, please contact EMWB.

1.2 Manufacturer

Elektromotorenwerk Brienz AG
Mattenweg 1
CH-3855 Brienz Switzerland

1.3 Copyright

1.4 Guarantee

The warranty and liability is based on the conditions stipulated in the contract. All warranties and conditions stipulated in the contract must be stored together with this manual.

Modifications to the motor or to its protective equipment are forbidden. Only professionals instructed by EMWB may carry out repairs and maintenance on the motor.

The warranty and liability claim becomes void if unauthorised changes are made to the system without prior knowledge of and approval by EMWB.

1.5 Conformity

1.5.1 Guidelines

The motors have been designed and built compliant with the guidelines of directive 2006/95/EC (low-voltage directive), and are for use in industrial plants. When using the motors outside of the European Union, the regulations in the country in question must be observed.

1.5.2 Analyses run on the motors

Residual risk assessment, run by EMWB.

1.5.3 Person authorised for documentation

Person authorised for compiling the technical documentation::

Elektromotorenwerk Brienz AG, Mattenweg 1, CH-3855 Brienz Switzerland.

1.5.4 Language of the operating and maintenance instructions

These original operating and maintenance instructions were originally written in German, Versions in other languages have been translated and derived from the original.

1.5.5 Declaration of conformity

ELEKTRO MOTOREN WERK BRIENZ AG

Mattenweg 1
CH-3855 Brienz
Tel. +41 33 952 24 24
Fax +41 33 952 24 00
info@emwb.ch
www.emwb.ch

EU-KONFORMITÄTSERKLÄRUNG
im Sinne der Niederspannungsrichtlinie 2014/35/EU

EU DECLARATION OF CONFORMITY
according to the Low Voltage Directive 2014/35/EU

UE DÉCLARATION DE CONFORMITÉ
dans la sens de la Directive Basse Tension 2014/35/EU

Wir **Elektromotorenwerk Brienz AG**
We
Nous **CH - 3855 Brienz BE**

erklären in alleiniger Verantwortung, dass das Produkt
declare under our sole responsibility that the product
déclarons sous notre seule responsabilité que le produit

Asynchronmotor / Synchronmotor der Typenreihe
AC induction motor / AC synchronous motor of series
Moteur asynchrones / moteur synchrones, séries complètes de

R… / F… / AF… / BF… / RF…
G… / AK…
PR… / Q… / GEN… / RR…
WA… / 7WA… / 70WA… / 3A… / 3B…/ 3C…
DMA… / DMA2… / DM1… / HJA… / HJN…
OMT1… / OMT2…
T1A… / T2A… / T3A…/ T4A…
T1C… / T2C… / T3C…/ T4C…
TM… / MS… / MY…
E…S… / D…S… / EBF… / DKF…

die einschlägigen Harmonisierungsrechtsvorschriften der Union erfüllt.
comply with the relevant Community harmonisation legislation.
est conforme à la législation communautaire d'harmonisation.

- Niederspannungsrichtlinie 2014/35/EU
  Low Voltage Directive 2014/35/EU
  Directive Basse Tension 2014/35/EU
- EMV-Richtlinie 2014/30/EU
  EMC directive 2004/108/EU
  Directive CEM 2014/30/EU
- Elektrische Ausrüstung
  Electrical Equipment
  L'équipement électrique
  EN60204-1:2006 + A1:2009 + AC:2010,
  EN 60204-11:2000 + AC:2010
- Drehende elektrische Maschinen
  Rotating electrical machines
  Machines électriques tournantes
  EN 60034-1:2010 + AC:2010, EN 60034-2-1:2007, EN 60034-5:2001 + A1:2007,
  EN 60034-6:1993, EN 60034-7:1993 + A1:2001, EN 60034-8:2007 + A1:2014,
  EN 60034-9:2005 + A1:2007, EN 60034-11:2004, EN 60034-12:2002 + A1:2007,
  EN 60034-14:2004 + A1:2007, EN 60034-30:2009
- ErP-Richtlinie 2009/125/EG 1)
  Directive 2009/125/EC (ErP) 1)
  Directive ErP 2009/125/EC 1)

1) Soweit die Produkte in den Anwendungsbereich der ErP-Richtlinie fallen, werden die Anforderungen der Verordnung (EG) Nr. 640/2009 vom 22. Juli 2009 bzw. Verordnung (EU) Nr. 4/2014 vom 06. Januar 2014 erfüllt.
1) As far as the products fall under the scope of the Directive 2009/125/EC (ErP) the requirements of the regulation (EG) No. 640/2009 dated from July 22nd, 2009 and Regulation (EU) No. 4/2014 dated from January 6, 2014 are fulfilled.
1) Tant que les produits tombent du champ d'application du Directive ErP 2009/125/EC ils répondent aux exigences du règlement (EG) nr. 640/2009 du 22. juillet 2009 et du règlement (EU) nr. 4/2014 du 6. janvier 2014.

Brienz, 18.04.2019

Markus Thöni
Geschäftsleitung technischer Bereich
Technical Management
Direction technique

1.6 Abbreviations used in this manual

EMWB	Elektromotorenwerk Brienz AG
Motor	IEC squirrel cage rotor standard motor
PM motor	Permanent magnet synchronous motor

1.7 Additional relevant documents

- Motor data sheet
- Technical description "Electrical version"
- Technical description "Mechanical version"

1.8 Area of applicability

This manual contains all versions of the liquid-cooled IEC squirrel cage rotor motors/generators, liquid-cooled Ex-protected motors, liquid-cooled brake motors and liquid-cooled permanent-magnet synchronous motors/generators.

1.8.1 Part number code

Standard motors

c	Model	
R	=	Foot B3
F	=	Flanged model, normal B5 or B14
AF	=	Flanged model, abnormal B5
BF	=	Flanged model B14B
RF	=	Foot/flanged model (also RAF, RBF)
PR	=	Extrusion profile
G	=	Flat model (without cooling fins)
AK	=	Octagonal model
Q	=	Square model
GEN	=	Generator
RR	=	Clean room model
_	Overall size (size in mm)	
_	Length of casing	
S	=	short
M	=	medium
L	=	long
_	Number of terminals	
_	Special model	
PM	=	Permanent magnet
SP	=	Rotor can model
S	=	Electrical deviation
M	=	Mechanical deviation
W	=	Liquid cooled
RT	=	Reluctance motor
HW	=	Hollow shaft model
B	=	Brake
HL	=	Manual release
HR	=	Handwheel
T	=	Tachogenerator
DG	=	Shaft encoder
IG	=	Incremental encoder
FK	=	Centrifugal switch
H	=	Stationary heater
ZW	=	Second shaft end
R	=	non-return device
SCH	=	Motor protection switch
V	=	Cast winding
KF	=	PTC / NTC
KL	=	Bimetal switching contact NCC / NOC
KY	=	KTY / PT 100

For a definition of the designations, refer to the appendix.

1.8.2 Nameplate

Nameplate

- Squirrel cage rotor three-phase motors
  Mains operation

2 Safety

2.1 Information for the persons in charge of the systems

The motors have been designed and built compliant with the guidelines of directive 2006/95/EC (*low-voltage directive*), and are for use in industrial plants. When using the motors outside of the European Union, the regulations in the country in question must be observed.

Local and branch-specific safety and construction/installation regulations must always be observed.

The persons responsible for the system must ensure the following:

- Planning and configuration work as well as all work on and with the motors will only be carried out by qualified personnel.
- This manual is available at all times.
- The technical data as well as specifications regarding permissible installation, connection, environmental and operating conditions will be observed consistently at all times.
- The specific safety and construction/installation regulations, as well as the regulations on the use of personal protective equipment/clothing will be observed at all times.

Note:

The customer service department of EMWB is available to provide support during planning, installation, startup and service of the motors.

The safety instructions in the single chapters are for the protection of all persons working with the motors, and are also intended to prevent damage to property. The safety instructions must be observed.

2.2 Basic safety regulations

For personal safety, as well as to avoid damage to property, the safety-relevant instructions and the following basic safety regulations must be observed at all times as per EN 50110-1 "work under absence of voltage". The basic safety regulations must be applied in the following order.

1. Isolate the equipment (also isolate all auxiliary circuits).
2. Secure against reactivation.
3. Verify that the system is deenergized.
4. Ground and short circuit
5. Cover or cordon off adjacent live parts.

After completing work, lift the restrictions in the reverse order.

2.3 Warning concept

The motors are designed and built according to the state-of-the-art in full observance of the safety regulations. However, there are residual risks in some areas. Notice is provided of these either on the motors themselves or in the operating and maintenance instructions.

The whole of chapter «2 Safety» applies to all those working on the motor as well as to the system administrator, and must be viewed by such persons as mandatory. The general safety instructions named in this chapter are supplemented at the relevant locations in the respective chapters by special safety instructions.

Warnings are designed as follows:

⚠ DANGER!

Indicates an immediate risk or hazard. If not avoided, the consequences will be fatal or result in irreversible injuries.

Behaviour guideline on how the hazard can be avoided.

⚠ WARNING!

Indicates a situation where there is a possible risk or hazard. If not avoided, the consequences may be fatal or may result in irreversible injuries.

Behaviour guideline on how the hazard can be avoided.

⚠ CAUTION!

Indicates a situation where there is a possible risk or hazard. If not avoided, the consequences may result in minor or slight injuries.

Behaviour guideline on how the hazard can be avoided.

⚠ NOTICE!

Designates the possibility of the occurrence of damage to property only if the work instructions are not observed.

Behaviour guideline on how damages can be avoided.

2.4 Symbols used in the manual

Risk of fatal electrical shock!
There are live parts behind covers marked with a lightning bolt (high-voltage warning sign). Touching these parts may result in fatal or severe injuries. The covers marked with a lightning bolt may only be removed by authorised persons (see Chapter «2.6.2 Authorised persons»).

Risk of injury from falling parts!
Suitable hoisting gear must be provided on-site (crane, ropes, chains). Never stand under suspended loads.

Risk of injury from entanglement or impact from load!
Take care when handling revolving parts. Never reach into machine parts that are running. Before handling, always switch off the motor and secure it against being unintentionally switched back on.

Risk of injury from rotating elements!
Take care when handling rotating parts. Never reach into machine parts that are running. Before handling, always switch off the motor and secure it against being unintentionally switched back on.

Injuries caused by heat!
The motor casings can become very hot. Do not touch the casing, or allow it to cool down first.

Risk from aggressive, chemical substances!
Aggressive, chemical substances can cause severe skin and eye injuries. If you come into contact with them, immediately wash your skin and eyes and contact a doctor.

Inhalation of hazardous vapours!
Gases and vapours that are injurious to health can arise when working with chemical substances. Always observe the instructions on the packages.

Risk of explosion!
IEC squirrel cage rotor standard motors must not be used in explosive environments.
Ex-protected standard motors are not suitable for hybrid explosive environments. Motors in increased safety "e", non-sparking model "nA" and for Zone 2 in areas exposed to explosion hazards may only be used in accordance with the stipulations of the appropriate regulatory authority. It is their job to determine the explosion hazard (classification of hazardous areas/zones). The dust-layer height for Zone 21 and Zone 22 motors must not exceed max. 5 mm.

Safety shoes must be worn (mandatory)!
Safety shoes must be worn to avoid injuries when moving the motor!

Safety informations for explosion-protected motors!
The increased danger in areas exposed to explosion hazards demands that special care and attention be taken of any instructions marked with the Ex symbol.

2.5 General safety regulations

2.5.1 Regulations and standards of overriding importance

The local safety and accident-prevention regulations apply in all cases for operation of the motors.

A motor must only be put into operation when all safety-relevant preventive measures of the system in which it is installed have been implemented (e.g. covers, overload protections, etc.).

2.5.2 Inspections, maintenance and monitoring obligation

The operator must correctly run the inspection and maintenance work listed in this manual at the prescribed intervals and must always keep the motors in perfect working order. Safety-relevant events must be communicated to the manufacturer immediately.

EMWB accepts no liability for damages resulting from incorrectly run or omitted inspection or maintenance work.

2.5.3 Spare parts

Only use original spare parts from EMWB. Otherwise, all warranty claims are void and neither safe operation nor operation within the specifications of the motor is guaranteed.

2.5.4 Safety instructions in the chapters

Additional safety instructions are contained in the single chapters.

These safety instructions and warning instructions must always be followed in addition to the safety instructions in chapter «2 Safety».

2.6 Responsibilities

2.6.1 Qualified personnel

Motors may only be handled by qualified personnel. Qualified personnel are persons who, due to their training and experience, are qualified to detect risks and possible hazards when handling the motors.

Instruction, Training

The operator will ensure that all users of the motors receive the prescribed course of instruction and the required training. If the operator is insufficiently trained or qualified then their safety is not guaranteed.

If insufficiently trained or non-qualified users work on the motors then there is a risk of injury or the risk of high damage to property.

2.6.2 Authorised persons

Work on the motors may only be carried out by authorised persons.

Persons are authorised who:

- have read and understood the safety instructions
- have the prescribed qualifications
- have completed the appropriate course of training for the product.

EMW

B accepts no liability for damage to property and injuries to persons caused by non-authorised persons.

Work on ex-protected motors must only be carried out by trained, authorised personnel.

2.7 General hazards and work protection

To protect the personnel, the general regulations described in the following sections for working at and around the motors apply.

Notice of special dangers/hazards is given in the appropriate chapters!

2.7.1 Work clothes

⚠ CAUTION!

Incorrect work clothes and missing protective equipment. Crushing and entanglement of body parts!

Wear tight-fitting clothing!

Bind together long hair and wear a hair-net or cap!

Always wear personal protective equipment during work!

2.7.2 Cleanliness at the workplace

⚠ CAUTION!

There is a risk of tripping or slipping if the workplace or the area around it is disorderly.

There must be no objects lying around on the ground!

Any escaped fluids must be wiped up immediately!

2.7.3 Electrical danger

⚠ DANGER!

Motors have live elements - risk of electrical shock! If the motor is used improperly, incorrectly or is not sufficiently maintained, then this may result in death, severe bodily injuries or damage to property.

Never dismount covers and make sure that any dismounted covers are reinstalled before putting the motor back into operation.

Before any adjustments are made and before any maintenance and repair work, switch off the motor at the main switch and take effective measures to prevent reconnection using cable tie or a padlock!

Only allow work at electrical system parts to be carried out by authorised expert personnel!

Observe the electrical connection rating specifications. Only operate the motor with suitable safety circuits/motor overload protection.

2.7.4 Danger from rotating parts

⚠ WARNING!

Risk of entanglement in the rotating parts!

Removal of covers, incorrect use of motors, incorrect operation or insufficient maintenance can result in death, severe bodily injuries or damage to property.

Before operation, always check to make sure that all safety equipment/devices, especially the covers, are attached and functioning correctly!

Always operate the motor correctly!

Before removing the protective equipment and covers, always switch off the system at the main switch and take effective measures to prevent reconnection!

Loose shaft ends must always be secured!

2.7.5 Danger from hot surfaces

⚠ WARNING!

Risk of burning when touching hot surfaces on motors!

Never touch the surfaces of motors during operation or shortly after operation. Touching top surfaces may result in severe burns to the skin!

Before any adjustments are made and before any maintenance and repair work, make sure that parts of the motor that could become hot during operation have cooled down sufficiently!

3 Description

3.1 Area of application

3.1.1 Correct use

The motors are intended for use as industrial drive systems and must not be used for dissimilar functions without prior consultation with the manufacturer (for exact specifications, see chapter «14 Explosion-protected standard motors»).

They accord to the harmonised standards of series EN/IEC 60034. Use in Ex-area is prohibited except when the identification of the rating plate explicitly permits this.

Other usages are only possible after contractual agreement with manufacturer EMWB. Each and every usage of the motor that does not accord to the details in chapter «6 Assembly» is deemed an improper usage.

Correct usage also includes observance of the installation, startup, operation and maintenance instructions stipulated by EMWB.

If safe operation of the system is no longer ensured, it must be put out of operation and secured against unintentional startup. This may occur:

- when there is visible damage to the system or its components
- when there are defects
- when storage was in unfavourable conditions
- after there has been high stress during transport.

3.1.2 Incorrect use

Not intended for use in applications other than industrial applications, or when other, increased requirements are made (e.g. contact with children).

Motors are not intended for use outside of the parameters indicated in chapter «14 Explosion-protected standard motors».

3.1.3 CE Mark

Low-voltage machines are incomplete machines for installation in machines within the meaning of the current machinery directive. Commissioning is forbidden until conformity of the end product to this directive is determined (observe EN 60204-1!).

3.2 Delivery

Check the delivery for completeness

The motors are put together according to the requirements of the individual customer.

After receiving the delivery, check immediately to make sure that it agrees with the accompanying documents. EMWB does not provide any warranty for deficiencies that are subsequently claimed. A claim should be made for:

- visible transport damages; to be made immediately with the transport company.
- visible deficiencies or incomplete delivery; to be made immediately with EMWB.

The operating and maintenance instructions are part of the delivery. They must be kept at a suitable location.

3.3 Structure

3.3.1 Version

Motors from this series are squirrel cage rotor three-phase drives, and permanent magnet synchronous drives. The motors can be delivered as single-rotation models with various efficiency factors or as dual-speed motors for several speeds.

Standard degree of protection of the motors is IP55. Consultation with the manufacturer is required if higher degrees of protection are necessary.

The motors are produced individually in accordance with the motor data sheet or order acceptance. The delivered model may therefore deviate slightly from the specifications in this manual. The details in the motor data sheet or in the delivered shopping documents are binding.

Depending on the application, the temperature must be monitored by sufficient means (e.g. PTC thermistor).

There is a higher current flow for a short time caused by switch-on; this increases the heat on the winding and the rotor. If a motor is switched on and off frequently without there being appropriately long idling or operating phases, then the temperature may increase too much.

The winding may be damaged due to thermal overload!

Consultation with EMWB is always required if the motor is to be operated with a frequency converter.

Special regulations apply for operation with a frequency converter in areas exposed to explosion hazards (see «10.3 Operation at the frequency converter»).

3.3.2 Design of the bearing

The motors contain bearings with lifetime grease lubrication.

The amount of grease in the bearing normally suffices for 20,000 operating hours or 36 months under normal operating conditions.

If any revision is made to the motor then the bearing must be replaced.

Bearing method and bearing types

The motors are fitted with commercially available rolling-contact bearings. They are appropriately dimensioned and noise-tested. Special low-vibration and low-noise bearings can be supplied on request.

For bearing types, refer to «11.8.1 Bearing method and bearing types»

For motors with groove ball bearings, the fixed bearing is on the drive end. The floating bearing, which is used to balance linear extension, is installed on the non-drive end.

3.3.3 Mechanical load values of the motor shaft

The radial loads using standard bearings are listed in the following table. They are designed for a lifetime of 20,000 hours at a frequency of 50 Hz. To achieve the same lifetime at a frequency of 60 Hz, the values must be decreased by 6%. The values apply for horizontal and vertical positioning of the motor, and are valid at clearance x from the shaft collar.

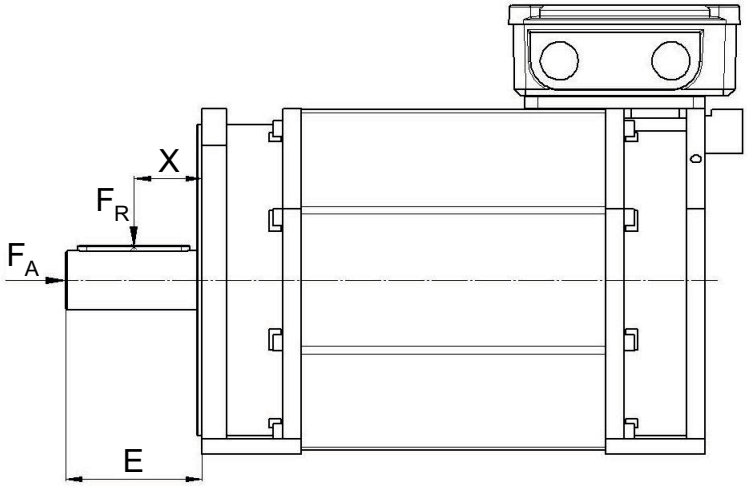

Table for radial load (FR)

BG	Speed			
	3000 min^{-1} x = 0.5 E [N]	1500 min^{-1} x = 0.5 E [N]	1000 min^{-1} x = 0.5 E [N]	750 min^{-1} x = 0.5 E [N]
56	255	300	340	380
63	365	460	520	580
71	370	460	520	580
80	610	770	880	990
90	650	820	940	1050
100	890	1160	1310	1470
112	890	1110	1280	1430
132	1440	1780	2100	2310
160	1390	1780	2050	2350
180	1980	2630	3080	3420
200	1880	2440	2990	3320
225	3800	5500	5860	6160
250	4700	6000	6420	6750
280	5000	6200	7440	7810
315	5140	6300	7550	7930

The maximum forces listed apply for horizontal mounting.

Higher loads can result in damage to the motor shaft or the bearing!

The sum of the effective forces is relevant for motors with two drive shaft ends!

⚠ NOTICE!

The stipulated values only apply to a fixed bearing at the driving end and for horizontal mounting of the motors. Simultaneous axial and radial load on request.

Table for axial load (FA)

BG	Speed			
	3000 min^{-1} [N]	1500 min^{-1} [N]	1000 min^{-1} [N]	750 min^{-1} [N]
56	220	290	340	380
63	290	390	450	520
71	300	400	470	530
80	570	760	890	1010
90	600	810	960	1080
100	830	1120	1320	1500
112	820	1100	1300	1470
132	1300	1710	2060	2320
160	1300	1750	2090	2390
180	1830	2570	2980	3380
200	1760	2370	2900	3280
225	3300	5100	5800	6650
250	4200	5600	6500	7400
280 S	3900	6000	7300	8300
280 M	3800	5900	7200	8200
315 S	3700	6000	7150	8140
315 M	3600	5900	7100	8000
315 L	3500	5700	6770	7700

3.3.4 Balance quality

Standard motor delivery from the EMWB is with a half-key balance in accordance with DIN 60034-14.

The motors are designed in vibration level A.

3.3.5 Torque transmission

Shaft components must only be assembled/disassembled correctly using suitable tools. Always make sure that the rolling-contact bearing is not damaged.

If a belt-drive drives the motor, make sure that the belt is not too tight (forces on the motor bearing).

Attachments must be carefully and dynamically balanced before assembly.

The shaft components must be secured against releasing or moving independently.

The maximum axial and radial forces in accordance with the technical motor data sheet must not be exceeded!

3.3.6 Design of the winding

The stator windings are designed as standard according to insulation class F. The highest permitted constant temperature of the threshold temperature is 155[°C], in accordance with insulation class F.

The windings are manufactured from high-quality enamelled wire, suitable surface insulation material and impregnation material. The insulation system of the motor windings has a high level of mechanical and electrical strength and guarantees a long lifetime.

The insulation is suitable up to an absolute humidity of 30 g water per m3. Bedewing of the winding must be prevented. Please check for higher values!

Optionally the windings can be designed with the following winding shields:

- PTC
- PT100
- KTY
- NTC
- Switching contact NCC / NOC

Additional possible designs:

- installation of stationary heater
- insulation for tropics
- increased moisture guard
- winding in class H

4 Liquid cooled

4.1 Mode of function

The liquid-controlled motors differ in design and method of flow of the cooling medium as follows:

4.1.1 AK = octagonal model (axial medium)

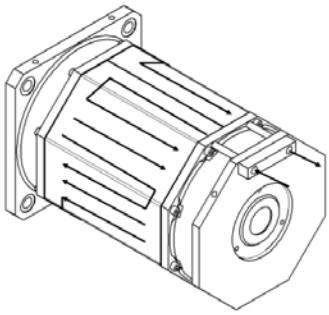

The cooling medium adapter is also the inlet and outlet of the cooling medium. The cooling medium flows through the chambers alternately in the axial direction.

4.1.2 G = flat model (spiral-shaped medium)

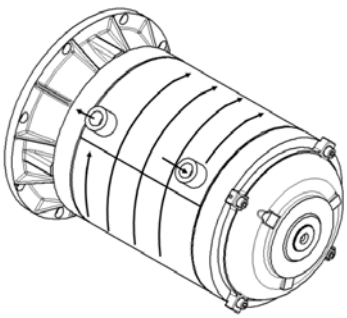

The cooling medium flows through the cooling medium inlet and outlet connections at the side on the motor. The cooling medium flows through the motor in a spiral.

4.1.3 G = flat model (axial medium)

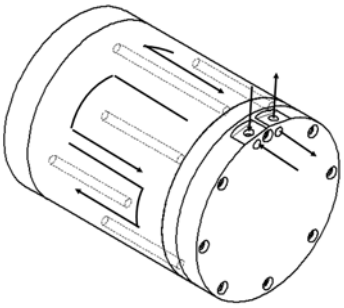

The cooling medium flows through the cooling medium inlet and outlet connections on the non-driven side of the motor. The cooling medium flows through the chambers alternately in the axial direction.

4.2 Cooling

4.2.1 Cooling medium

The intended cooling media are water, cooling lubricant (water-oil mix) or hydraulic oil. When using water as the cooling medium, low-oxygen, soft water (7 - 15° fH) must be used to prevent premature onset of corrosion damages and chalk deposits. This can be achieved in a closed system or by using feed water.

Total hardness		Name	Hardness			
mol/m^3 or mmol/l	°fH		French °f	German DH or °d	English °e	American ppm
0 - 0.7 0.7 - 1.5	0 - 7 7 - 15	very soft soft	0 - 7 7 - 15	0 - 3.92 3.92 - 8.4	0 - 4.9 4.9 - 10.5	0 - 70 70 - 150

To prevent blockages in the cooling jacket and concomitant overheating of the motor, the cooling medium must be cleaned with a filter system in the cooling system. The maximum size of the permissible foreign body is 10^{-3} mm.

4.2.2 Flow rate for normal model

The flow rate of the cooling medium depends on the size and power of the motor. The flow rates listed in the following are guideline values.

Type	Power [kW]		Cooling medium	
Overall size	2-pole	4-pole	Cooling water [l/min]	Hydraulic oil [l/min]
G 71 M	1.30	1.20	1.6	8.0
G 80 M	1.85	1.35	2.1	10.5
G 90 S	2.40	1.85	2.7	13.5
G 90 L	3.30	2.60	2.7	13.5
G 100 L	5.50	4.60	3.5	17.5
G 112 M/L	8.20	7.00	4.5	22.5
G 132 S	11.00	9.00	6.6	33.0
G 132 M	16.50	12.50	6.6	33.0
G 160 M	24.00	17.50	9.6	48.0
G 160 L	27.50	24.00	9.6	48.0
G 180 M	34.00	27.50	12.0	60.0
G 180 L	41.00	33.00	12.0	60.0
G 200 L	53.00	47.00	15.0	75.0
G 225 S	70.00	66.00	19.0	95.0
G 225 M	79.00	75.00	19.0	95.0
G 250 M	81.00	80.00	23.0	115.0
AK 71 L	1.85	1.35	2.1	10.5
AK 80 L	3.30	2.60	2.7	13.5
AK 90 S/L	5.50	4.60	3.5	17.5

Type	Power [kW]		Cooling medium	
Overall size	2-pole	4-pole	Cooling water [l/min]	Hydraulic oil [l/min]
AK 100 L	8.20	7.00	4.5	22.5
AK 112 M/L	16.50	12.50	6.6	33.0
AK 132 S/M/L	27.50	24.00	9.6	48.0
AK 160 M/L	41.00	33.00	12.0	60.0
AK 180 M/L	53.00	47.00	15.0	75.0
AK 200 L	70.00	66.00	19.0	95.0
AK 225 S/M/L	81.00	80.00	23.0	115.0

Flow volumes for special motor powers on request.

4.2.3 Temperatures

The inlet temperature of the cooling medium can be max. 40°C. A higher temperature reduces the max. power of the motor. The cooling medium should not drop below an inlet temperature of 15°C. If cooling is too intensive, condensation water may develop in the inside of the motor.

To once more cool down the heating of the cooling medium in the motor from ΔT = 7-10 K to the recommended inlet temperature of 20 - 25°C, a heat exchanger can be installed in the cooling system. For smaller motors, this can be replaced by a larger, closed return basin.

4.2.4 Pressure of the cooling medium

The cooling jacket is tested after assembly at a pressure of 5 bar for tightness. The constant pressure of the cooling medium must therefore not exceed 2.0 bar.

4.3 Repairs

4.3.1 Maintenance

The liquid-cooling of the types listed under «4.2.2 Flow rate for normal model» is maintenance free (attention: check the filter).

4.3.2 Faults in connection with the liquid cooling

Fault / possible cause	Measure
Liquid outlet at the casing	
Surface of casing damaged	Check the surface of the casing and the welded joints for crack formation
Liquid outlet between the flange, endshield and casing	
Damaged seal	Replace the seal
Damaged sealing surfaces on the casing, flange or endshield	Rework the sealing surfaces, Replace the seal
Liquid outlet in the area of the cooling medium adapter	
Adapter too tight or too loose	Mount the adapter correctly, additionally seal the thread using ergo 4209
Damaged adapter	Replace the adapter
Excessive heating of the casing	
Interrupted flow of cooling medium	Check the flow / throughput of the cooling medium
Blocked cooling chambers	Check the flow / throughput of the cooling medium Check cleanliness of the cooling medium
Unequal quantity of cooling medium at the inlet and outlet	
Leaky casing	Check tightness of the casing and connections
Blocked cooling chambers	Check the flow / throughput of the cooling medium Check cleanliness of the cooling medium

5 Application engineering

5.1 Transport

⚠ WARNING!

Incorrect fixture during transport. Death, severe bodily injuries or damage to property may result.

The motors may only be transported and lifted at their lifting hooks in a position appropriate to their model; otherwise, they will tilt over or they may slide within the lifting device.

Use all the lifting hooks on the motors.

Securely tighten lifting hooks that are screwed in.

Screw the eye bolts on up to their contact surfaces.

If required, use suitable and sufficiently sized transport means such as lifting straps (EN -1) and lashing straps (EN12195-2)

Remove and store any existing transport locks just before commissioning. The transport locks must be re-used for any additional transport.

The motors are packaged differently depending on the transport distance and the their sizes.

Observe the symbols attached to the packaging.

5.1.1 Symbols on the packaging

The following symbols are on the packaging:

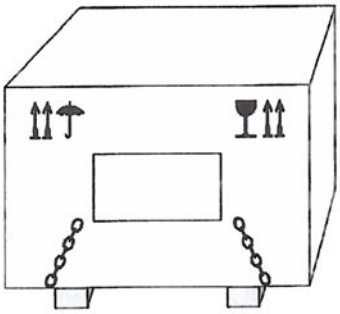

Arrows point upwards!

Do not overturn!

Fragile!

Place down carefully! Do not drop!

Sensitive to moisture!

Protect from moisture!

Hook here!

Fix the chains for loading onto a crane at the positions marked.

Centre of gravity!

Risk of injury from falling load!

When lifting or transporting with a fork-lift or similar transport device, observe the centre of gravity of the load!

5.2 Storing

5.2.1 Storing outdoors

When storing outdoors, the following points in particular must be observed:

- When necessary, damages to the packaging must be repaired before storing.
- Lift the motor onto a stable surface with a minimum height of 100 mm from the ground to prevent rising damp and to ensure good air circulation underneath.
- The storage location must be vibration-free. If this cannot be ensured, the motor must be placed onto suitable damping elements.
- Stable temperature conditions in the range of 10 °C to 50 °Cn must be ensured.
- Temperatures below the dew point should be avoided to prevent formation of damp within the motor. If this is not possible, the motor must be protected with a stationary heater.
- The motor must be covered so that is it completely protected from damp and weather influences.
- Lids and covers must not touch the surfaces of the motor.
- The motor must be protected from insects and small animals.

5.2.2 Storing indoors

When storing indoors, the following points in particular must be observed:

- Lift the motor onto a stable surface with a minimum height of 100 mm from the ground to prevent rising damp and to ensure good air circulation underneath.
- The storage location must be vibration-free. If this cannot be ensured, the motor must be placed onto suitable damping elements.
- Stable temperature conditions in the range of 10 °C to 50 °Cn must be ensured.
- Low humidity (<75%) must be ensured.
- Temperatures below the dew point should be avoided to prevent formation of damp within the motor. If this is not possible, the motor must be protected with a stationary heater.
- The ambient air must be clean, dust-free and free of corrosive gases.
- The motor must be protected from insects and small animals.

5.2.3 Short-term storage (≤ 2 months)

When storing for a short period, no special measures are required apart from those for storing outdoors or indoors.

5.2.4 Long-term storage (> 2 months)

The following must be observed in addition to the measures described for "storing outdoors" and "storing indoors":

- Check the paint condition every 3 months. If paint damages are determined, clean the corroded areas and apply a new coat.
- Check the condition of the anticorrosion coating on bare metal surfaces every 3 months. If corrosion is visible, finish-grind blank areas with fine sand paper and re-treat with anti-corrosive.
- Once per year, the motor must be operated for at least 30 minutes at the rated frequency and rated voltage to prevent standstill damages to the bearing.
- The service life of the grease is reduced when the motor is stored for longer periods.
- Closed bearings must be replaced after a max. storage time of 48 months.
- If condensation water enters the bearing then it must be replaced because condensate results in a change of consistency of the bearing grease.
- The insulation resistance must be checked before each startup.

5.2.5 Corrosion protection

Bare metal surfaces

Bare metal surfaces, and especially shafts, must always be treated with an anticorrosion coating. If corrosion is visible, remove it with fine sand paper and re-treat with anticorrosive.

Paintwork

If the paintwork is damaged due to incorrect handling of the motor, the location of the damage must be cleaned professionally and reworked.

When selecting a paint, please make sure that it is compatible to the paint already used.

5.3 Electromagnetic compatibility

Electromagnetic harmonics that can reach very high frequencies occur when there are fast current changes. Such interferences occur especially in case of fast switch-ons and switch-offs, or when torque-changes are strong (e.g. at the piston compressors), and they extend across a wide frequency band. Such harmonics are an unacceptable mains interference and result in undue emitted interferences.

Frequency converter

- When operating at a frequency converter, interference signals of various strengths can occur, depending on the version of the frequency converter.
- Always observe the EMC instructions of the manufacturer of the frequency converter.
- Noise voltages on the lines of the installed sensors (e.g. PTC resistors) can occur due to interference from the frequency converter.
- Effective shielding connects the machine feed line extensively and conductively at the metal connection box of the motor (with EMC screw connections).
- Avoid exceeding the thresholds as per EN/IEC 61000-6-3 in the drive system, comprised of the motor and the frequency converter.

When used correctly, motors within a closed enclosure meet the requirements of the current directive for electromagnetic compatibility.

Noise immunity

In principal, noise immunity requirements as per EN/IEC 61000-6-2 are met by the motors. For motors with installed sensors (e.g. PTC resistors), the operator himself must ensure sufficient noise immunity, e.g. by selecting a suitable sensor signal line (with shield when appropriate) and analyser.

6 Assembly

6.1 Safety-relevant instructions

⚠ WARNING!

Touching live parts on motors may result in severe or fatal injuries!

Erection, commissioning and maintenance may only be carried out by authorised experts. The instructions of the manufacturer and the local valid legal requirements, ordinances and such-like must be observed during the erection and commissioning of the equipment.

⚠ WARNING!

Motors have hot surfaces. Danger of burns to hands and arms!

Allow the motor to cool down before working at it.

Only remove covers after the motor has cooled down.

The motor may only be operated by trained experts.

Lines must not be attached to the machine housing.

⚠ CAUTION!

Climbing on motors or on the complete system results in injuries from falling!

The dimensions of the fixing flange and other attachments does not allow for any additional load such as, i.e. climbing onto the system.

Observe the technical data on the shields on the machine housing.

6.2 Erection

The motor must be tightly screwed onto a solid and vibration-free foundation using well-anchored foundation blocks.

Firmly tighten or remove screwed-on lifting eyes after erecting the motor.

- When the motors are arranged vertically, special attention must be paid to stable footing during assembly. Use the existing lifting eyes and lifting straps (DIN EN 1492-1) when necessary, and/or lashing straps (DIN EN 12195-2) to stabilise the motor's position.
- At the shaft end, prevent penetration of fluid upwards along the shaft!
- Prevent foreign bodies from falling into the fan cover! When erecting the motor vertically with the shaft end pointing downwards, attach a protective cover.
- Clean metallic bright surfaces coated with anticorrosion agent (required for perfect installation and/or erection of the motor) with suitable cleaning agent!
- Do not block ventilation! Also take the pre-warmed exhaust air from adjacent units into consideration!
- Avoid long-term effects of weather (rain, snow, ice and even dust). When using or storing the motors outdoors, protect them with appropriate covers from the influences of weather.
- Do not exceed the permitted axial and radial forces!
- The temperature class of the motor indicated on the rating plate must be the same or higher than any flammable gases that may occur.
- Shocks to the drive shaft must be avoided at all times!

6.3 Fixing in place

When mounting on the wall or ceiling, the fixture must be on solid beams made of profiled iron sheeting. Metal foundations should have a protective anticorrosion layer.

Transmission of vibration and noises can be avoided by using rubber buffers. Only use suitable materials in perfect working order.

When fixing the motor, make sure that any condensation water holes are at the lowest point. The plug screws of these condensate holes must be removed.

6.4 Balancing / shaft attached parts

- Shaft add-on parts must only be assembled/disassembled correctly using suitable tools. Always make sure that the rolling-contact bearing is not damaged.
- Shaft add-on parts must be carefully balanced before mounting them. Avoid the use of adjusting screws attached on one end. Standard motor delivery from the manufacturer is with a half-key balance in accordance with EN 60034-14.
- Shaft add-on parts must be secured against releasing or moving themselves.
- For belt drives, make sure that the belt is not too tight (forces on the motor bearing). Tighten the belt in accordance with the manufacturer's specifications.
- Rotating parts must never be openly accessible and must be secured by suitable cladding.
- Nonobservance of the type of balance results in vibrations that have a damaging effect on the bearing and motor parts.
- The conductance of the belt for areas exposed to explosion hazards must prevent electrostatic charging.
- Couplings or belt pulleys must be assembled using a suitable mounting device. The motor shaft and the driven shaft must be aligned to each other exactly. Misalignments result in vibrations or even in damages to the bearing. When using belt pulleys, make sure that no unacceptable radial forces act on the bearing. For drives with several V-belts, motors with reinforced bearings may have to be used.

6.5 Special measures

⚠ NOTICE!

Damages caused by knocks to the drive shaft.

Avoid knocks to the drive shaft.

Supplementary documents will be supplied when required for special measures, depending on the model.

Couplings or belt pulleys must be assembled using a suitable mounting device. When using belt pulleys, make sure that no unacceptable radial forces act on the bearing.

6.6 Removing add-on parts

⚠ NOTICE!

Damages caused by knocks to the drive shaft.

Avoid knocks to the drive shaft.

Suitable equipment/apparatus must be used when disassembling drive elements.

7 Electrical connection

7.1 General

⚠ WARNING!

Motors have live elements - risk of electrical shock!

Have all work carried out only by qualified experts when the motor is at standstill.

Switch off (deenergize) the motor and auxiliary circuits and take effective measures to prevent reconnection.

Before commencing work, establish a safe protective conductor connection to protect from contact voltage.

The motors operate in accordance with EN 60034-1 with mains voltage fluctuations of up to ±10 % and/or frequency fluctuations of up to ±2 %. The network data must agree with the voltage and frequency specifications on the rating plate. Never exceed the thresholds!

Connect in such a way that a permanent, safe electrical connection is ensured (no protruding wire ends); use the assigned cable-end fittings (e.g. cable lug, cable end sleeve).

Establish the electrical connection in accordance with the delivered electrical schematics.

Establish all connection lines as per EN/IEC 60204-1.

The following required details for the connection are stipulated in the technical data:

- Direction of rotation.
- Number and arrangement of the terminal boxes.
- Wiring and connection of the winding.

For Ex-motors, make sure that the terminals are secured against twisting.

7.2 Connection diagram

7.2.1 Y, D, Y/D

The valid connection diagram is in the terminal box of every motor delivered by the manufacturer. If anything is unclear or in case of modifications, contact with EMWB is recommended.

The diagrams for the types of connection most-used in practice are contained in the following.

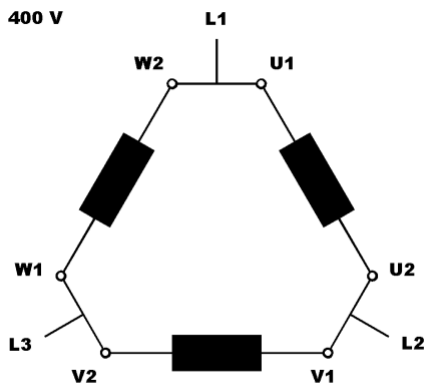

Δ - Schaltung

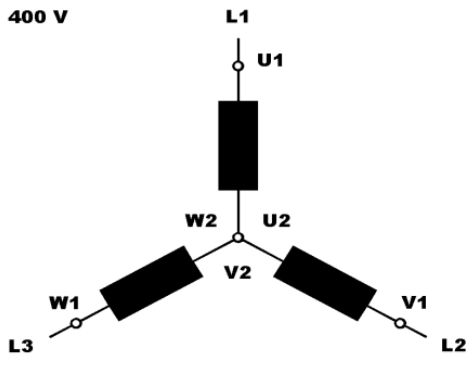

Y - Schaltung

Normally, 6 connection terminals and 1 ground terminal are in the terminal box.

The connection diagrams for the delta and star connection are as follows:

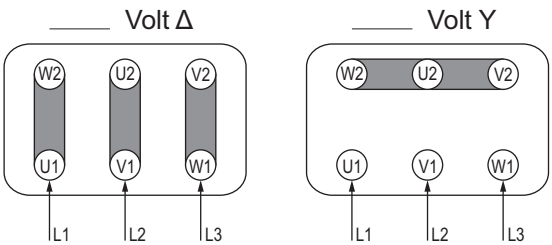

1 speed	
1 terminal board:	6-pin
Startup:	Direct ?, Y or Y/?
Wiring:	? or Y

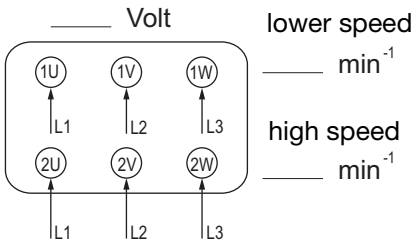

2 speeds,	2 separate windings
1 terminal board:	6-pin
Startup:	both speeds direct
Wiring:	both speeds Y-internal

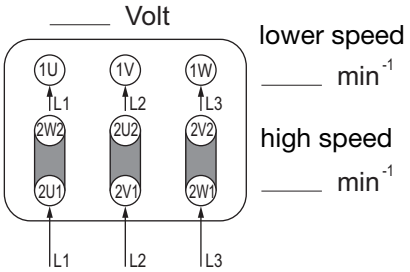

2 speeds	2 separate windings
1 terminal board:	9-pin
Startup:	lower speed: direct high speed: direct or Y/?
Wiring:	lower speed Y-internal high speed ?

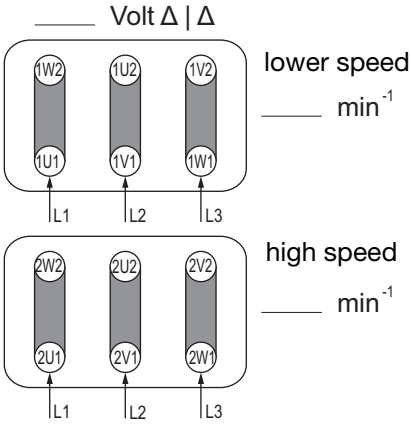

2 speeds	2 separate windings
2 terminal boards:	6-pin
Startup:	both speeds: direct or Y/?
Wiring:	both speeds: ?

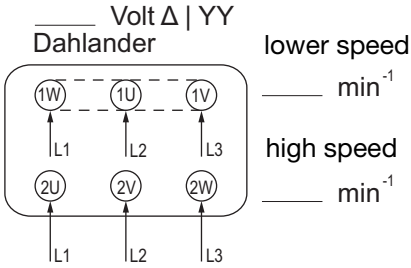

2 speeds	1 tapped winding
1 terminal board:	6-pin
Startup:	both speeds: direct
Wiring:	lower speed: ? high speed: YY

Name of connection terminal addition element (winding shield/heating)		
Name	**Element**	**Function**
1TP1 / 1TP2	Low-temperature conductor (PTC)	Winding shield
1TB1 / 1TB2	Bimetal contact (NCC)	Winding shield
1TM1 / 1TM2	Bimetal contact (NOC)	Winding shield
1R1 / 1R2	KTY or PT	Winding shield
1TN1 / 1TN2	High-temperature conductor (NTC)	Winding shield
1HE1 / 1HE2	Heater	Stationary heater
1BA1 / 1BA2	AC brake	Brake
1BC1 / 1BC2	DC brake	Brake

Names and numbering as per EN 60034-8

7.3 Junction boxes

⚠ DANGER!

Motors have dangerous voltages. If the motor is not deenergized there is the risk of electrical shock.

When working at open junction boxes, the motor must not be connected electrically.

⚠ NOTICE!

Damage to property at the junction box.

Make sure that the components in the inside of the junction box, e.g. terminal board, cable connections, are not damaged.

There must be no foreign bodies, dirt or damp in the junction box.

Close entry points with o-rings or suitable flat seals, and close the junction box itself both dust and watertight using the original seal.

Observe the correct tightening torques for cable glands and other screws.

Secure shaft keys for test operation without drive elements.

The junction box must be closed dust and watertight!!

7.4 Tightening torques

7.4.1 Electrical connections - terminal board connections

Thread Ø		M 3.5	M 4	M 5	M 6	M 8	M 10	M 12	M 16
[Nm]	min.	0,8	0,8	1,8	2,7	5,5	9	14	27
	max.	1,2	1,2	2,5	4	8	13	20	40

7.4.2 Cable glands

Avoid damaging the cable sheath!

Adjust the tightening torque to the cable sheath material!

For tightening torques of cable glands made of metal and plastic for direct attachment to the motor, as well as for other screw connections (e.g. reductions), the appropriate torques as listed in the table must be used.

	Metal [Nm]	Plastic [Nm]	Clamping area in [mm] Standard -30 °C...100 °C	O-ring Ø in [mm]
M 12 x 1.5	8	1,5	3.0 ... 7.0	1,5
M 16 x 1.5	10	2	4.5 ... 10.0	1,5
M 20 x 1.5	12	4	7.0 ... 13.0	1,5
M 25 x 1.5			9.0 ... 17.0	2,0
M 32 x 1.5	18	6	11.0 ... 21.0	2,0
M 40 x 1.5			19.0 ... 28.0	2,0
M 50 x 1.5	20		26.0 ... 35.0	2,5
M 63 x 1.5			34.0 ... 45.0	3,0

7.5 Connecting the ground conductor

Grounding conductors are obligatory for safety reasons and must only be connected to their specially marked terminal!

The ground-conductor cross-section of the motor must comply with EN IEC 600034-1.

The installation regulations, e.g. according to EN/IEC 60204-1, must also be observed.

There are two fundamental ways of connecting a ground conductor to the motor:

- Internal grounding with connection in the junction box at the intended and correspondingly marked location.
- External grounding with connection at the stator at the intended and correspondingly marked locations.

7.5.1 Ground cross sections

The ground cross sections must be selected as follows (as per EN 60034-1):

For other cross sections of live conductors, the minimum cross section of the ground conductor must be at least equivalent to those of the live line for conductor cross sections up 25 mm^2.

Cross section of live conductor [mm^2]	Cross section of ground or earthing conductor [mm^2]
4	4
6	6
10	10
16	16
25	25
35	25
50	25
70	35
95	50
120	70

7.6 Concluding measures

Before closing the junction box / connecting base of the machine housing, check the following:

- Electrical connections in the junction box are established as per the specifications in the previous sections and tightened at the correct torque.
- Keep to the air gaps between non-isolated parts:
  3.5 mm up to 400 V, 5.5 mm up to 660 V.
- Avoid protruding wire ends.
- Connect the motor as per the stipulated direction of rotation.
- The inside of the junction box must be kept clean and free of line remains.
- Check all seals and sealing faces for damages, and keep them clean.
- Unused openings in the junction boxes must be properly plugged.

8 Optional accessories

8.1 Brake

8.1.1 Safety instructions

⚠ DANGER!

Brake motors have dangerous voltages. if the motor is not switched off (deenergized), then death or severe injuries may be the consequence.

Maintenance and control work may only be carried out when the motor is deenergized!

The standard degree of protection of the brake motors is IP 55. Consultation with the manufacturer is required if higher degrees of protection are necessary.

⚠ WARNING!

Explosion danger; brake motors are not suitable for explosive environments. Death, severe bodily injuries and damage to property may result.

The brake motors must never be used in areas exposed to explosion hazards.

The brake motor is a combination of an IEC standard or special motor and an electromagnetic, spring-closed single disk brake. They are intended for use in industrial drive systems and must not be used for any other function without first contacting the manufacturer.

No changes must be made to any of the production facilities except those expressly listed in this manual.

Not to be used in wet running (water or oil). If in contact with water, only use a rust-resistant flange and endshield. Request additional corrosion protection when ordering.

When hoisting gear is used, please note that when deenergized, generator operation can occur in reverse-gear machines. In service mode, always support the loads.

Do not clean the brake using flammable solvents.

Ensure that the brake surface has sufficient ventilation or cooling.

Check the operational reliability of the brake at regular intervals.

8.1.2 Description of brake motors

At standstill, the motor and the brake are deenergized. The pressure springs (4) in the magnet body (1) press the armature disk (2) that is moved axially onto the brake rotor (3). This is pressed against the braking surface of the endshield (5). The adjusting sleeve (6) ensures correct space between the magnet body (1) and the endshield (5). The brake torque is generated by a friction locking connection.

Applying a direct voltage to the excitation winding in the magnet body generates a magnetic field. The magnetic force generated acts on the armature disk and attracts it via air gap "a" against the spring force of the pressure springs to the magnet body. The brake rotor is released and the braking action is cancelled.

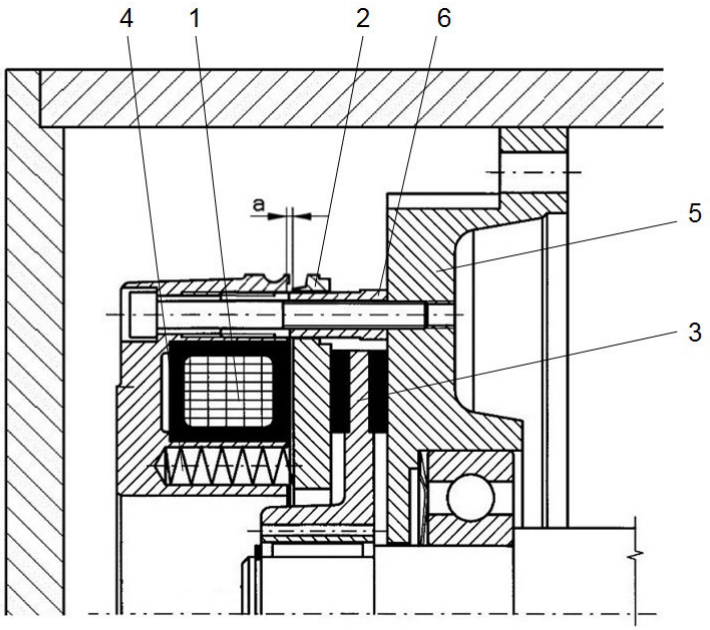

8.1.3 Braking power

The type of application and the relations arising from the motor torque [MN] and the braking torque [M_B] must be considered when selecting the brakes.

Overall size	Small brake		Medium brake		Large brake	
	Brake type	Braking torque M_B [Nm]	Brake type	Braking torque M_B [Nm]	Brake type	Braking torque M_B [Nm]
56	FDB 08	5				
63	FDB 08	5				
71	FDB 08	5	FDB 10	10		
80	FDB 10	10	FDB 13	20		
90	FDB 10	10	FDB 13	20	FDB 15	40
100	FDB 13	20	FDB 15	40	FDB 17	60
112	FDB 13	20	FDB 15	40	FDB 17	60
132	FDB 17	60	FDB 20	100	FDB 23	150
160	FDB 20	100	FDB 23	150	FDB 26	250
180	FDB 23	150	FDB 26	250		
200	FDB 23	150	FDB 26	250	FDB 30	400

On request from size 225.

8.1.4 Maintenance of the brake

In normal operation, the brake can be considered maintenance-free. When switching operations are frequent, air gap "a" and the concomitant wear to the brake must be checked regularly.

On reaching the value "a_{max}" the value must be readjusted to "a_{rated}".

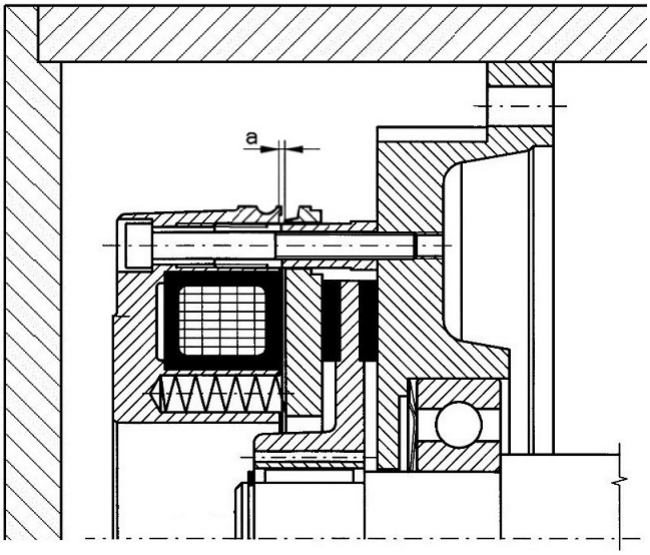

Measuring the air gap

▶ **Procedure:**

- Dismount the protective pipe.
- Check air gap "a" with a feeler gauge at a minimum of 3 locations.

If value "a_{max}" is reached then readjustment to "a_{rated}" must be made (see Table).

FDB	08 [5 Nm]	10 [10 Nm]	13 [20 Nm]	15 [40 Nm]	17 [60 Nm]	20 [100 Nm]	23 [150 Nm]	26 [250 Nm]	30 [400 Nm]
a_{rated} +0.1	0,2	0,2	0,3	0,3	0,3	0,4	0,4	0,5	0,5
a_{max}	0,6	0,7	0,8	0,9	1,0	1,1	1,1	1,2	1,2

Setting air gap "a"

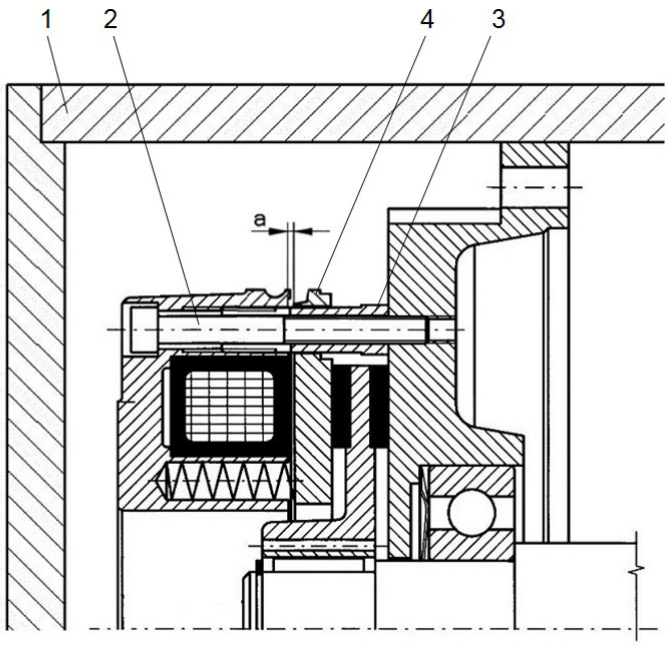

▶ **Procedure:**

- Dismount the protective pipe (1).
- Unscrew the bolts (2), release the cable in the terminal box (polarity insignificant).
- Adjust the air gap (a) as per the table by screwing the sleeve bolt (3) into the magnetic part (4).
- Tightening the screws (2).
- Check air gap (a) with a feeler gauge at a minimum of 3 locations.
- Establish the electrical connection.
- Mount the protective pipe (1).

8.1.5 Electrical supply

Power supply

Direct current is required to operate the electromechanical safety brake. The direct current brake coil is normally connected via a rectifier installed in the terminal box. Direct power supply using a battery or at the DC system is also possible.

Brake coil data

Brake type	Core coil [V, DC]	Permissible voltage range [V, DC]	Braking torque [Nm]	Coil resistance at 20 °C [Ohm] ±5%	Coil power at rated voltage [W]	Coil current at rated voltage [A]
FDB 08	24	19-28	5	21	27	1.14
	102	85-133		340	31	0.30
	195	162-236		1475	26	0.13
FDB 10	24	19-28	10	16.7	34	1.44
	102	85-133		271	38	0.38
	195	162-236		1070	36	018
FDB 13	24	19-28	20	14	41	1.71
	102	85-133		228	46	0.45
	195	162-236		990	38	0.20
FDB 15	24	19-28	40	11.6	50	2.07
	102	85-133		192	54	0.53
	195	162-236		754	50	0.26
FDB 17	24	19-28	60	8.9	65	2.7
	102	85-133		174	60	0.59
	195	162-236		602	63	0.32
FDB 20	24	19-28	100	7.2	80	3.33
	102	85-133		120	87	0.85
	195	162-236		464	82	0.42
FDB 23	24	19-28	150	6	96	4.00
	102	85-133		109	95	0.94
	195	162-236		385	99	0.51
FDB 26	24	19-28	250	4.6	125	5.22
	102	85-133		83	125	1.23
	195	162-236		300	127	0.65
FDB 30	24	19-28	400	3.3	175	7.27
	102	85-133		58	179	1.76
	195	162-236		230	165	0.85

Larger brakes on request!

8.1.6 Half-wave rectifier and bridge rectifier

Half-wave rectifier

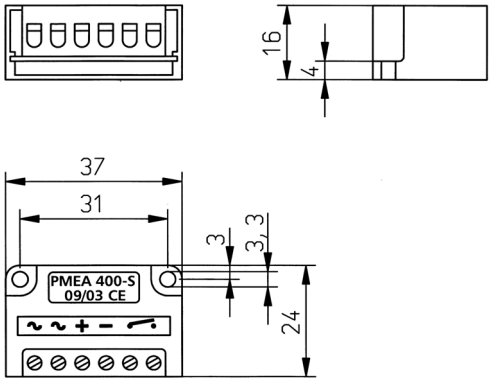

The half-wave rectifiers are fitted with high-quality avalanche diodes. This makes them much more resistant to voltage peaks.

Switching from the AC side (WS)
When switching is carried out from the alternating current side, the magnetic field slowly declines and the brake is applied with a delay. The connection is from the rectifier on the alternating current side.

Switching from the DC side (GS)
Switching from the DC side is suitable for all drives that require exact braking, especially for hoisting gear. The connection is made between the rectifier and the coil. This achieves lower running time.

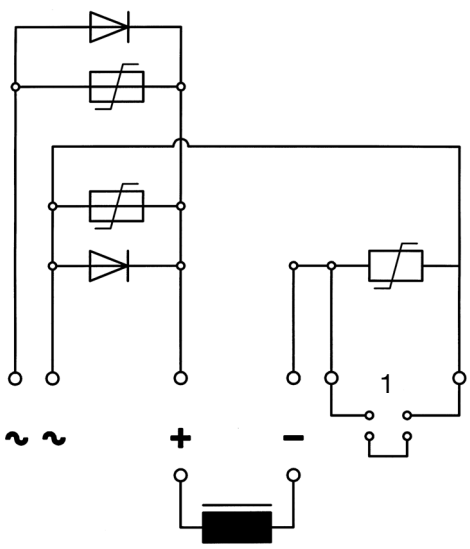

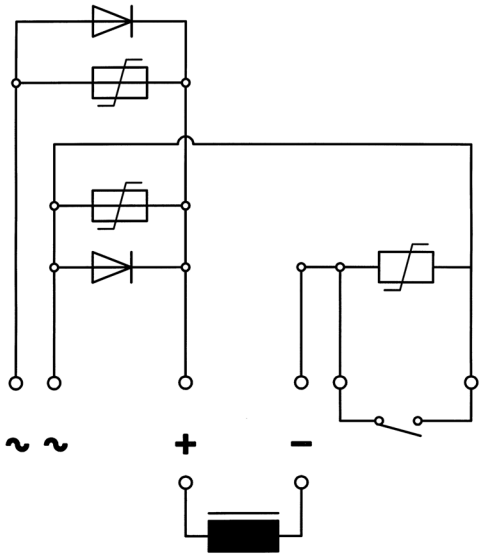

Mount the wire jumper (1) instead of the switching contact.

Name of article	Max. connection voltage [V, AC]	Output rectifier voltage [V, DC]	Rated current [A]	Peak block voltage [V, AC]
PME A 400 S	400	180	1,00	1700
PME A 600 S	600	270	1,85	1700

Bridge rectifier

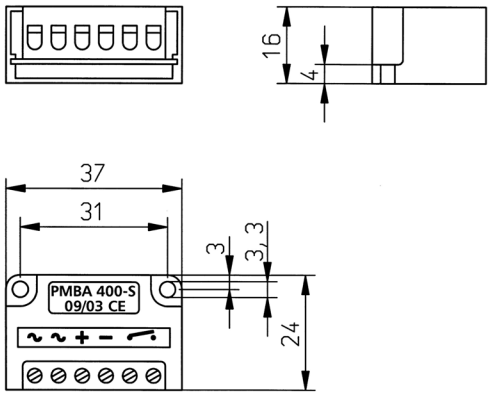

The bridge rectifiers are fitted with high-quality avalanche diodes. This makes them much more resistant to voltage peaks.

Switching from the AC side (WS)
When switching is carried out from the alternating current side, the magnetic field slowly declines and the brake is applied with a delay. The connection is from the rectifier on the alternating current side.

Switching from the DC side (GS)
Switching from the DC side is suitable for all drives that require exact braking, especially for hoisting gear. The connection is made between the rectifier and the coil. This achieves lower running time.

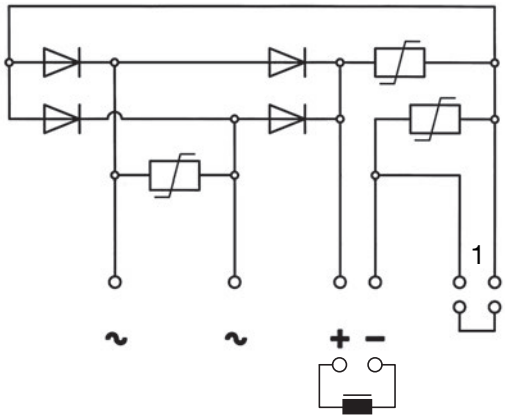

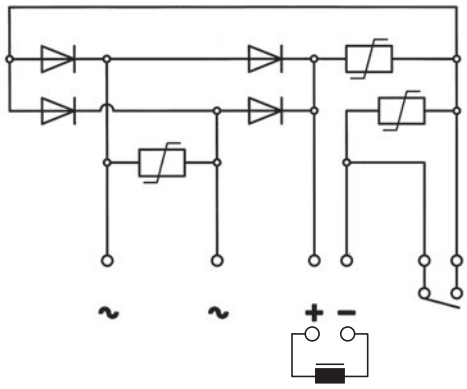

Mount the wire jumper (1) instead of the switching contact.

Name of article	Max. connection voltage [V, AC]	Output rectifier voltage [V, DC]	Rated current [A]	Peak block voltage [V, AC]
PMB A 400 S	400 230	360 207	2,00 2,00	1700 1700

8.1.7 Switching schematics

Switching from the DC side (GS)

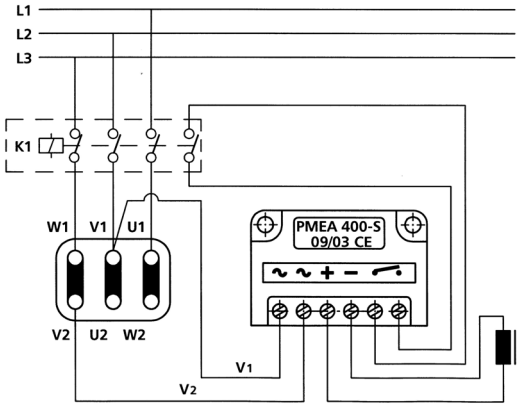

Half-wave rectifier

Example for switching from the DC side of motors with ?-connection. Motor: 3 x 400V AC Rectifier output:180V DC coil voltage:162-236V DC

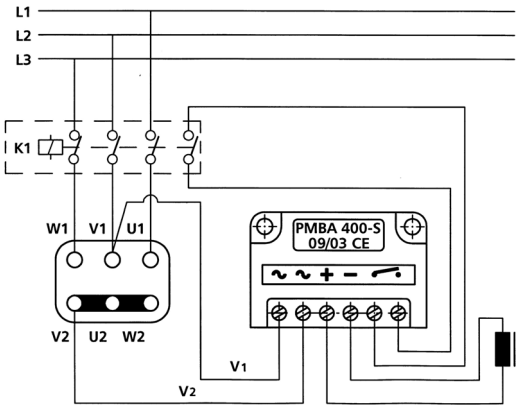

Bridge rectifier

Example for switching from the DC side of motors with Y-connection. Motor: 3 x 400V AC

Rectifier input: Neutral point and phase 230V AC

Rectifier output: 207V DC Coil voltage: 162-236V DC

Switching from alternating current side (WS)

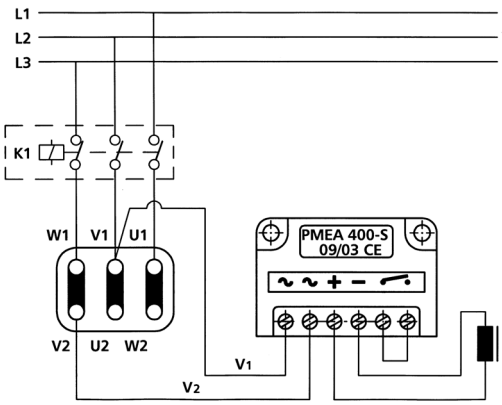

Half-wave rectifier

Example for switching from the alternating side of motors with ?-connection. Motor: 3 x 400V AC

Rectifier output: 180V DC Coil voltage: 162-236V DC

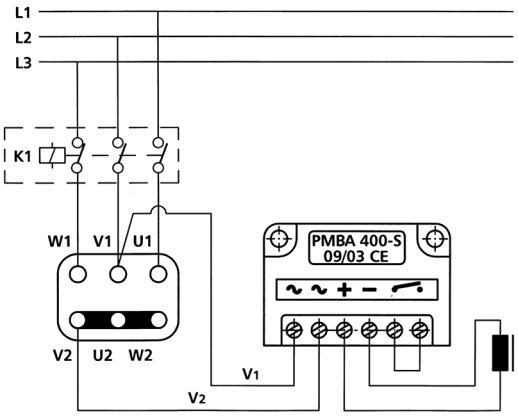

Bridge rectifier

Example for switching from the alternating current side of motors with Y-connection. Motor: 3 x 400V AC

Rectifier input: Neutral point and phase 230V AC

Rectifier output: 207V DC Coil voltage: 162-236V DC

8.2 Incremental encoder

Motors can be additionally fitted with incremental encoders. These are installed on the non-driven side behind the brake.

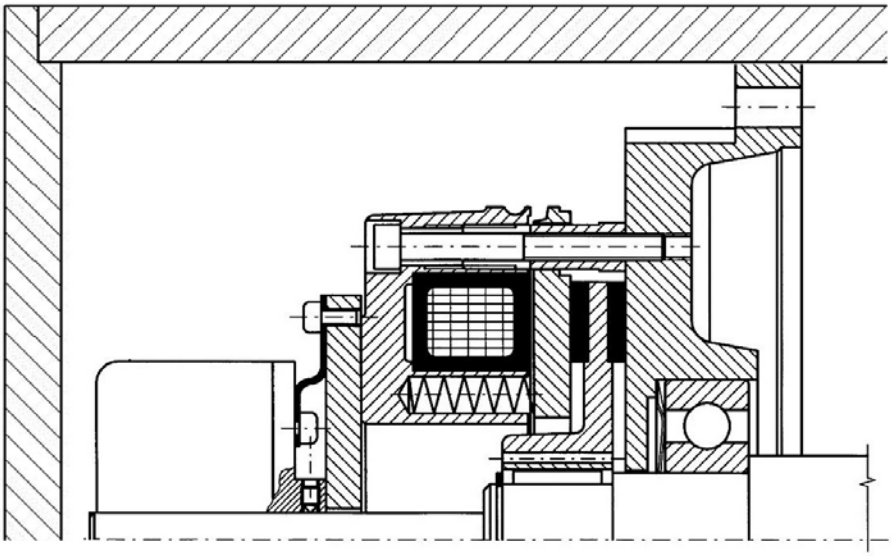

A combination of several options is available on request.

9 Startup

9.1 Insulation resistance

9.1.1 Checking the insulation resistance

⚠ WARNING!

There is a risk of electrical shock when working on live parts!

This work must only be carried out by expert personnel.

Before startup, mount all covers that prevent persons from touching active or rotating parts, or that are required for correct air guidance and therefore for effective cooling.

⚠ WARNING!

Dangerous voltage at the terminals. During measurement, and immediately after measuring the insulation resistance of the winding, the terminals may still be conducting dangerous voltages. Touching them can result in death, severe bodily injuries and damage to property!

If any mains lines are still connected, make sure that no network voltage can be applied. After measuring the insulation resistance, discharge the winding by connecting it to the casing.

Checking the insulation resistance

Insulation resistors can change due to the ageing process, damp, soiling, damage, radiation and chemical or physical influences. The insulation resistance must therefore be checked before startup as well as after a longer period of storage or standstill! Before starting to measure the insulation resistance, observe the instructions in the manual for the megohmmeter. Disconnect any cable of the main circuit from their terminals before starting the insulation measurement.

If there is a critical insulation resistance, the windings must be dried or thoroughly cleaned and dried when the rotors are removed.

After drying (heating) the windings, the insulation resistance is usually smaller. The insulation resistance can only be correctly assessed after converting to reference temperature 25 °C.

If values measured are critical, the insulation resistance should subsequently be measured at appropriately shorter intervals.

Measuring the insulation resistance

Before starting up the motor, and especially when there are indications of increased damp, the insulation resistance between the phases and ground must be checked. This check is mandatory after the motor has been stored for more than six months.

The insulation resistance must also be checked (mandatory) after repairing the motor.

The resistance measured with an insulation tester (no crank inductor) (500 VDC measured at 25 °C) should not exceed the following value:

Ri >(20 x U) / (1000 + 2 x P)

Ri = Insulation resistance (MOhm)
U = Voltage (V)
P = Rated power (kW)

- Disconnect any cable of the main circuit from their terminals before starting the insulation measurement.
- Measure the insulation resistance of the winding against the machine casing when possible at a winding temperature between 20 and 30°C. Other values apply for the insulation resistance at other temperatures.
- When measuring, wait until the final value for the resistance is reached. This usually occurs after approx. 1 minute. Read off the insulation resistance.

Thresholds of the insulation resistance for the standard winding

The following table lists the measuring voltage as well as the thresholds for the minimum insulation resistance and critical insulation resistance of the standard winding at 25 °C.

	Rated insulation voltage U_N < 2 kV
Measuring voltage	500 [V]
Minimum insulation resistance for new, cleaned or repaired windings	10 MOhm
Critical specific insulation resistance after a longer period of operation	0.5 MOhm / kV

- When measuring at winding temperatures ≠ 25°C, the measured value must be converted to the reference temperature 25°C and compared to the values in the table above.
  - For each 10 K temperature increase, the insulation resistance is halved.
  - For each 10 K temperature decrease, the resistance is doubled.
- Dry, reconditioned windings have typical insulation resistances from >100 to 2000 MOhm, depending on the size of the winding, the model and the rated insulation voltage. If the value of the insulation resistance is near to the minimum value then this might be due to damp and/or soiling.
- During the operating time, the insulation resistance of the windings may drop to the critical insulation resistance due to environmental and operational influences. The critical insulation resistance at a winding temperature of 25 °C is calculated by multiplying the rated insulation voltage (kV) by the specific critical resistance value (0.5 MOhm/ kV).

Example:

Critical resistance for rated insulation voltage U_N = 400 V:

400 V x 0.5 MOhm / kV = 0.20 MOhm

When the critical insulation resistance is reached or undershot, this can result in damage to the insulation and to voltage flashovers.

- Contact the manufacturer.
- When the measured value is near to the critical value, check the insulation resistance in the subsequent period at shorter intervals.

9.2 Measures to be taken before commissioning

Check the following after correct installation and before starting up the system:

- Correct installation and alignment of the motor.
- Motor is connected in the stipulated direction of rotation.
- Agreement of the operating conditions with the intended data in accordance with the rating plate.
- Check the bearing temperatures in the models with bearing thermometers during initial motor startup. Set the values for warnings and shut-off at the monitoring device.
- Make sure that no speeds higher than those approved on the rating plate are run.
- Check the settings of the drive elements (e.g. alignment and balance of couplings, belt forces when driven by belt, force of teeth and tooth backlash when driven by gear drive, and the radial and axial play of connected shafts).
- Check that ground and potential equalisation connections have been made correctly.
- Check the fixing bolts, connecting elements and electrical connections.
- Remove any lifting eyes that are bolted on after erecting the motor, or the release lock.
- Turn the rotor without any blade rubbing.
- Cover the open shaft end and secure the shaft key from being ejected.
- Check any existing forced ventilators to ensure they have the specified direction of rotation.
- Check the feed and connection of the cooling medium.
- Check the inlet temperature, flow rate and pressure of the cooling medium.
- Perfect function of any installed brake.
- Observe the stipulated mechanical threshold speed nmax.

If the design and configuration of the motor requires a special arrangement of the frequency converter, appropriate details are contained on the rating plate or additional plate.

Additional checks may be required appropriate to the special conditions at the system in question.

9.3 Switching on

9.3.1 Measures to be taken when commissioning

After installation or modifications, the following measures are recommended for a normal startup of motors:

- Start the motor without a load and allow it to turn idle. Allow the motor to run down before switching back on.
- Check mechanical running for noises or vibrations.
- If the motor is not running smoothly, or if it is making abnormal noises, switch off the motor and determine the cause as it runs down.
- If mechanical running improves immediately after switching off, then there are magnetic or electrical causes. If mechanical running does not improve after switching off, then there are mechanical causes: e.g. motor is imbalanced, insufficient alignment, insufficient screw connections on the foundation.
- When the motor is running perfectly mechanically, switch on any existing cooling units, let the motor run for some time idle, and observe it.
- Load the motor when it is running perfectly. Check motor smoothness, and read-off and log the values for voltage, current, and power.
- Monitor and log the temperatures of the bearing, windings etc., until full-load is reached.

10 Operation

10.1 Safety instructions for operation

⚠ WARNING!

Network with non-grounded neutral point!

Operation of the motor at a network with non-grounded neutral point is only permissible for shot periods of time, e.g. until the error is advanced (ground connection of a line, EN/IEC 60034-1).

⚠ WARNING!

Do not remove covers when the motor is running! Rotating or live parts are hazardous. Removing the required covers may result in fatal or severe bodily injuries or damage to property!

If the cover has to be removed, switch off and secure the motor.

Covers that prevent active or rotating parts from being touched or that are required for correct air guidance must be closed during operation.

⚠ WARNING!

Faults during operation.

Changes to normal operation, e.g. higher power consumption, temperatures or vibrations, unusual noises or odours, triggering of monitoring devices etc., indicate that there is a defect. Defects can result in fatal or severe bodily injuries or damage to property!

Contact the maintenance personnel immediately.

In case of doubt, immediately switch off the motor taking into consideration the safety conditions specific to the system.

⚠ CAUTION!

The surfaces of motors reach high temperatures that may result in burns if touched!

Do not touch the casing, or allow it to cool down first.

⚠ NOTICE!

Minimum load to cylinder roller bearing.

Always observe the radial minimum load of the cylinder roller bearing. The manufacturer's specifications must be observed.

⚠ NOTICE!

Risk of corrosion from condensation water. If there are changes to the motor and/or ambient temperatures, moisture can condense inside the motor.

Formation of condensation water must be avoided at all times.

10.2 Safety instructions for cleaning

To ensure perfect motor cooling, the air paths (air grids, ducts, cooling fins, tubes) must be kept free of dirt and contamination.

⚠ DANGER!

Risk of explosion! It is forbidden to clean the motors in an explosive atmosphere! Death, severe bodily injuries and damage to property may result.

Surfaces can statically discharge and trigger discharges that can result in ignitions.

10.3 Operation at the frequency converter

10.3.1 General

The motor must be approved by the manufacturer for operation at the frequency converter.

The operating instructions of the frequency converter must be observed. The frequency converter must be approved for the appropriate output and voltage.

The appropriate standards must be observed (mandatory) for operation with a frequency converter.

10.3.2 Influence of potential equalisation / circuit continuity

⚠ CAUTION!

If earth currents flow over the bearing area, the bearing and the bearing grease may be destroyed!

Earth currents must be avoided or suppressed.

To prevent damages to the bearing due to electrical continuity, current-insulated bearings are normally used on the non-driving side.

If necessary, the motor must be connected by appropriate copper wires / copper strips to the system to ensure potential equalisation. These wires/strips must be kept as short as possible.

10.3.3 Insulation system thresholds

⚠ CAUTION!

Voltage peaks destroy the insulation system and increase the risk of an electrical shock!

Voltage peaks must be avoided at all times!

- The insulation system is approved for the appropriate operating voltage, and checked accordingly.
- The insulation system may be damaged if the frequency converter is not properly set.
- The insulation system may be damaged if the wiring is not carried out correctly.

⚠ NOTICE!

The intermediate circuit voltage must not be more than max. 50% higher than the operating voltage of the motor. If the intermediate circuit voltage is higher than this, this may result in an excessive stress to or destruction of the insulation system.

Decrease the intermediate circuit voltage.

10.4 Shutdowns

⚠ NOTICE!

Risk of corrosion if stored for longer periods.

When shutting down for more than 12 months, apply corrosion protection, and carry out conservation, packaging and drying measures.

During longer periods of standstill (> 1 month) operate the rotor at regular intervals, approximately once per month, put the motor into operation or at least rotate the rotor. Before switching back on for recommissioning, observe section «9.3 Switching on» . Remove any installed rotor holding device before turning the rotor.

10.5 Fault table

Before remedying a fault, read chapter «2 Safety» !

If electrical faults occur when operating the motor at a frequency converter, also read and observe the operating instructions for the frequency converter.

General faults caused by mechanical or electrical influences are listed in the following tables.

Possible cause	Measure
Bearing running hot	
Too much or too little grease on bearing	Optimum lubrication of the bearing
Defective bearing	Replace the bearing
Forces on the motor shaft are too great	Check the axle alignment and load from the drive
Heating of winding	
Too much power consumption	Check the power consumption, check the load
Blocking of the shaft	
Defective bearing	Replace the bearing
Driven machine is blocked	Remove the block
Dirt/contamination	Clean the drive system
Motor standstill	
Overload	Check the load from the drive
No operating voltage, or voltage too low	Check operating voltage/fuses
Phase interruption	Check the winding, check the feed line
Condensation water, moisture	Drain the condensation water, dry the motor and re-impregnate the winding

Possible cause	Measure
Motor hum	
Phase interruption	Check the voltage source, check the winding
Short-circuit in the winding	Check the winding
Wear to bearing	Replace the bearing
Incorrect speed	
Overload or underload	Check configuration and check the driven machine
Phase interruption	Check the winding, check the feed line
Changes in frequency	Check the frequency or check the frequency converter
Incorrect direction of rotation	
Error in the wiring	Check the connection as per the diagram
Vibrations, oscillations	
Wear to the bearing and motor imbalance or imbalance of driven machine	Check the bearing and replace if necessary Check the motor and the driven machine separately for imbalance
Noises	
Wear to the bearing or mechanical friction of the motor or the driven machine	Check the bearing and replace if necessary Check the fan, coupling and drive side for signs of wear
Required power not reached	
Check the connection	Check the voltage of all 3 phases (check the switch-on circuit and fuse protection, exclude any overload)
Drive system fails on startup	
Incorrect start-up behaviour/fuse protection	Check switch-on circuit, smooth starter and power consumption

11 Repairs

11.1 Preparation and notes

⚠ WARNING!

Incorrect work during repairs may result in fatal or severe, irreversible injuries

Before commencing any work at the motors, make sure that the system is correctly switched off and secured.

In addition to the main circuits, also pay attention to any additional or auxiliary circuits, especially heating equipment!

Single parts of the motor can reach temperatures above 60 °C! Touching them may result in burns. Check the temperature of the part before touching it.

When cleaning with compressed air, make sure there is suitable offtake and take personal protection measures (goggles, respiration filter and suchlike)!

Chemical cleaning agent can damage the motor. Always observe the warning instructions and instructions for use of the manufacturer. Chemical agent must be compatible with the motor's components, especially the plastic components.

The operating conditions can vary considerably. The stipulated deadlines must be observed.

11.2 Optional models

Observe the appropriate construction standards when making any changes or repairs to listed machines! These machines are marked on the rating plate with the following "Markings".

Explosion protection

11.3 Touch-up paint damage, repaint

If the paint is damaged then the paint damages must be touched-up. This ensures corrosion protection.

Additional information on the correct paint system and on touching-up paint damage is available from the customer service.

11.3.1 Repainting

⚠ WARNING!

Risk of explosion from improper painting may result in death, severe bodily injuries and damage to property!

When the paint layer is too thick, it can electrostatically charge. A discharge may occur. There is also a risk of explosion when explosive mixtures are present at this moment.

If painted surfaces are repainted, one of the following requirements must be met:

- Limit the total thickness of the paint layer according to the explosion group:
  - IIA, IIB: total thickness of the paint layer maximum 2 mm.
  - IIC: total thickness of the paint layer maximum 0.20 mm for Group II (gas) motors.
- Limit the surface resistance of the paint used:
  - IIA, IIB, IIC, III: surface resistance maximum 1 GOhm from Group II and III (gas and dust) motors.
- Disruptive voltage maximum 4 kV for explosion group III (only dust).

11.4 Inspection

11.4.1 General inspection instructions

Safety-relevant instructions

Special consideration should be paid to the required lubrication intervals that deviate from the inspection intervals, when greased bearings are used.

During inspections it is not normally necessary to disassemble the motors. They only need to be disassembled when the bearings are replaced.

11.4.2 Initial inspection

Inspection schedule

Initial inspection after installation or repairs to the motor is normally carried out after approx. 500 operating hours, but at the latest after 6 months.

Running the inspection

In operation, check that:

- the electrical values are adhered to.
- the permissible temperatures at the bearings are not exceeded.
- smooth running and running noises from the motor have not worsened.

In standstill, check that:

- no abatements or cracks have occurred in the foundation.

Additional checks may be required appropriate to the special conditions at the system in question.

Deficiencies determined during inspection must be remedied immediately.

11.4.3 Main inspection

Inspection schedule

The main inspection must be carried out after approx. every 16,000 operating hours, at the latest however after 24 months.

Running the inspection

In operation, check that:

- the electrical values are adhered to.
- the permissible temperatures at the bearings are not exceeded.
- smooth running and running noises from the motor have not worsened.
- check the brakes of the brake motors for perfect function.

In standstill, check that:

- no abatements or cracks have occurred in the foundation.
- the alignment of the motor is within the permissible tolerances.
- all fixing bolts for both mechanical and electrical connections are tightened.
- the insulation resistors of the windings are sufficiently sized.
- lines and insulators are in correct working order and show no signs of discolouration.

Deficiencies determined during inspection must be remedied immediately.

11.5 Maintenance

11.5.1 Maintenance interval

⚠ CAUTION!

Chemical substances in greases and lubricants may cause skin irritation and inflame the eyes.

Observe the safety instructions of the manufacturer. Immediately wash any affected areas after coming into contact with chemical substances.

The motors have rolling-contact bearings with grease lubrication.

Run careful and regular maintenance, inspections and revisions to detect and remedy faults at an early stage before they can result in secondary damages.

The motors are used in very different operating conditions. The stipulated maintenance intervals must therefore be adjusted to the local conditions (dirt, operating frequency, load, etc.).

If there are faults or unusual conditions, an inspection must be run. Such faults could be, e.g. motor overload, short-circuit, etc.

Preventive maintenance

EMWB recommends the following maintenance intervals to ensure problem-free operation:

Measures	Operating time - Intervals	Deadlines
Initial inspection	After 500 operating hours	At the latest after 6 months
Cleaning	Depending on local level of soiling	
Main inspection	Approx. every 16,000 operating hours	At the latest after 24 months

11.5.2 Lubrication

The motors are standard-fitted with rolling-contact bearings with permanent grease lubrication.

The following details must be observed for motors with greased bearings.

Grease

The manufacturer uses the following standard lubricating greases:

a) For standard groove ball bearings (closed version)
   Type: Multemp SRL
   Temperature range: -50 °C to +150 °C

b) For normal grooved ball bearing and cylinder roller bearings (open version)
   Type: Turmogrease N3
   Temperature range: -40 °C to +180 °C

When the bearing is replaced, make sure that the new bearing is greased with the prescribed grease (see above)!

For motors with local lubrication. make sure that the bearing is regreased using the prescribed grease (see above).

Consult EMWB for details of relubrication intervals and the appropriate amounts of grease.

11.6 Cleaning

It must be ensured at all times that the motor is kept clean.

11.6.1 Cleaning the surfaces

⚠ WARNING!

Breathing impairment due to dust.

When cleaning with compressed air, make sure there is suitable extraction and that you are wearing personal protective equipment (goggles, respiration filter, etc.). Observe the instructions of the manufacturer.

Never point compressed air towards the shaft outlet or machine openings!

The cleaning intervals depend on the level of local contamination.

11.6.2 Condensation water

If there are changes to the motor and/or ambient temperatures, moisture can condense inside the motor.

⚠ NOTICE!

Risk of corrosion from condensation water. If there are changes to the motor and/or ambient temperatures, moisture can condense inside the motor.

Formation of condensation water must be avoided at all times.

11.7 Repairs

11.7.1 Repair instructions

Motors may only be put into operation by authorised, expert personnel. They must have read and understood the manual.

⚠ WARNING!

Motors have live parts - risk of electric shock!

Have all work carried out only by qualified experts when the motor is at standstill.

Switch off (deenergize) the motor and auxiliary circuits and take effective measures to prevent reconnection.

Before commencing work, establish a safe protective conductor connection to protect from contact voltage.

⚠ CAUTION!

Falling parts of the motor and tools may cause severe injuries!

Depending on their dimensions, parts of the motor may be very heavy. Maintenance or repair work must be carried out at a suitable location (workshop with appropriate equipment).

If the motor has to be transported, observe the instructions in chapter «5 Application engineering»!

11.8 Bearing, bearing replacement

The motors contain bearings with lifetime grease lubrication or local lubrication. For a permanent grease lubrication, the amount of grease in the bearing normally suffices under normal operating conditions for 20,000 operating hours or 36 months, depending on which occurs first. For bearings fitted with a local lubrication unit, the specific relubrication instructions must be observed.

If any revision is made to the motor then the bearing must be replaced.

11.8.1 Bearing method and bearing types

The motors are fitted with commercially available rolling-contact bearings. They are appropriately dimensioned and noise-tested. Special low-vibration and low-noise bearings can be supplied on request.

The bearing types are listed in the table below.

BG	Bearing type on driving end	Bearing type on non-driving end
56	6201	6201
63	6202	6202
71	6202	6202
80	6204	6204
90	6205	6205
100	6206	6206
112	6306	6306
132	6308	6308
160	6309	6309
180	6310	6310
200	6313	6313
225	6314	6314
250	6315	6315
280	6317	6317
315	6318	6318

For motors with groove ball bearings, the fixed bearing is on the drive end. The floating bearing, which is used to balance linear extension, is installed on the non-drive end.

When replacing the bearing, exactly the same type must be used! Additional specific instructions are contained in the data sheet of the respective motor.

11.8.2 Lifetime of bearing

Replacement of the bearing is recommended within the scope of preventive maintenance of groove ball bearings after 16,000 operating hours or after 24 months runtime, depending on which occurs first.

The lifetime of the grease is reduced if the equipment is stored for longer periods of time. In case of permanently-lubricated bearings, this results in a reduction to the storage lifetime of the bearing.

It is recommended that the bearing or grease already be replaced after 12 months storage time. If the time is more than 4 years then the bearing or grease must be replaced.

11.8.3 Replacing the bearing

If the bearing is not replaced in the manufacturer's factory then the guarantee for the motor is nullified.

The operating hours are reduced, e.g. when the machine is erected vertically, is subjected to greater levels of vibration and knocks, is often operated in reversing operation, where there are higher ambient temperatures or the machine is run at higher speeds, etc.

The bearings can be pulled off from the rotor with a suitable tool.

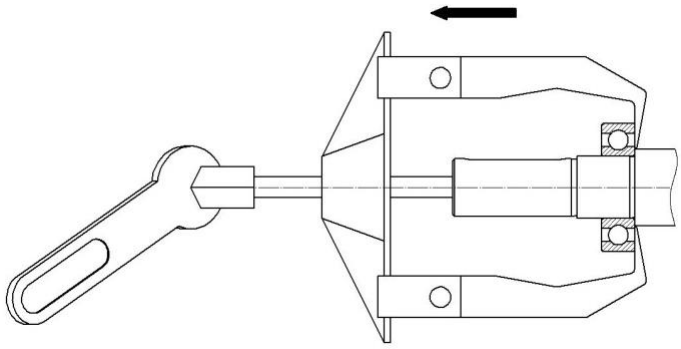

Before mounting the new bearings, the bearing seatings on the shaft and the bearing seatings in the flange / endshield must be checked. The bearing seatings must be measured and their surface quality must be checked (Ra 0.8).

Before mounting the bearings, the rotor shaft must be balanced as per the instructions from EMWB.

The bearings are heated for installation to max. 80°C (final temperature) by an induction unit and shrunk onto the shaft (see figure below).

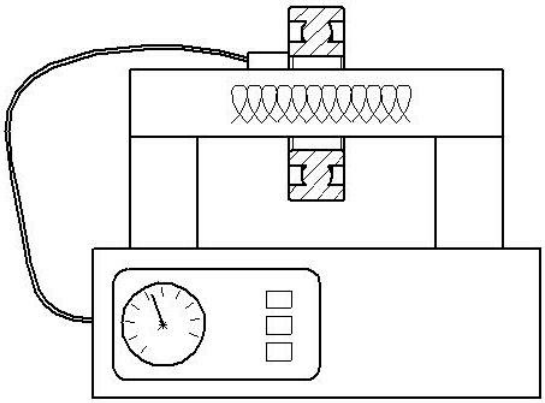

Avoid impact effects on the bearings! This could damage the bearings.

12 Spare parts

12.1 Ordering parts

When ordering spare or repair parts, the exact name of the part as well as details of the motor type and the serial number must always be provided.

12.2 Definition of subassemblies

Spare parts

Spare parts are machine parts that can be ordered during production time and up to 5 years after production has been discontinued.

Repair parts

Repair parts are machine parts that can only be delivered during the active production time of the motor.

Repair parts are parts that are used for repairs or modifications of the current product.

Delivery commitment for replacement machines and for spare parts after the motors have been delivered:

- For up to 5 years, EMWB will deliver a comparable motor with respect to mounting dimensions and function in case of complete failure (may involve changeover to a newer series).
- Spare parts can be delivered for up to 5 years.
- EMWB will provide information on spare parts for up to 5 years, and deliver the necessary documents if required.

13 Disposal

13.1 Introduction

Protecting the environment and its resources are high priorities in the business objectives of EMWB. Environmentally-friendly design, technical safety and occupational health are already deep-seated goals of the company in the development-phase of our products.

The following chapters contain recommendations for environmentally-friendly disposal of the motor and its components. Local regulations must be observed during disposal.

13.2 Preparing for disassembly

The motors must be disassembled, or their disassembly must be supervised, by authorised expert personnel with suitable expert knowledge. Licensed waste management facilities are suitable for this.

▶ **Procedure:**

- Disconnect the electrical connections and remove the cable.
- Remove fluids such as oil, cooling fluids, etc.
- Release the motor from its fixtures.
- Transport the motor to a location suitable for disassembly.

13.3 Disassembly of the motor.

Disassemble the motors according to the typical general procedures of machine construction.

⚠ WARNING!

The motors are comprised of heavy parts. These parts may drop down when being dismantled.

Machine parts must be borne securely or secured against dropping.

13.4 Dispose of the components

13.4.1 Components

For the most part, the motors are comprised of recyclable materials (steel, copper and aluminium).

Separate the components for recycling according to the following categories:

- Steel and iron
- Aluminium
- Nonferrous metal, e.g. windings
- Insulation materials
- Cable and lines
- Electronic scrap

13.4.2 Fluids, lubricants and chemicals

Separate fluids and chemicals for disposal, e.g. according to the following categories:

- Oil
- Grease
- Cleaning agents and solvents
- Paint residue
- Anticorrosion agent

Dispose of separated components in accordance to local regulations or using a waste management company.

13.4.3 Packaging material

- A waste management company should be contacted if necessary.
- Wooden packaging for transport by sea is made of impregnated wood. Observe the local regulations.
- The cling foil on the sealed packing contains aluminium residue. It can be used for energy recovery. Dirty cling foil should be disposed of by waste incineration.

14 Explosion-protected standard motors

Work on ex-protected standard motors must only be carried out by trained, authorised expert personnel.

14.1 Part number code

Example of designation: ATEX (gases)

CE 0158 Ex II 2 G Ex e IIC T4 Gb

CE marking

Notified body's identification number

Marking to prevent explosions (ATEX 95)

Equipment group
Areas of explosive gas atmospheres II

Category
Zone 0 1
Zone 1 2
Zone 2 3

Ex-Atmosphere
Gas G

Explosion protection

Ignition protection category
increasing safety e
non-sparking versions nA

Explosion group
Acetone, Ethane, Benzol, Petrol
Butane, Propane, Methane II A
Ethylene, Town gas II B
Hydrogen, Acetylene II C

Temperature classe
Surface limit temperature
450°C T1
300°C T2
200°C T3
135°C T4
100°C T5
85°C T6

EPL Equipment Protection Level
Zone 0 Ga
Zone 1 Gb
Zone 2 Gc

Example of designation: ATEX (dusts)

CE 0158 Ex II 3 D Ex c t IIIC T120°C Dc IP65

CE marking

Notified body's identification number

Marking to prevent explosions (ATEX 95)

Equipment group (acc. to directive)
Areas of explosive gas atmospheres — II
Areas of explosive dust atmospheres

Category
Zone 20 — 1
Zone 21 — 2
Zone 22 — 3

Ex-Atmosphere
combustible dust — D

Explosion protection

Ignition protection category
Protection by housing — ta, tb, tc

Protection classes
IP5X — III A
IP5X — III B
IP6X — III C

Temperature
Surface limit temperature — Txx°C

EPL
Equipment Protection Level
Zone 20 — Da
Zone 21 — Db
Zone 22 — Dc

14.2 Nameplates

Nameplate 1

- Increased safety level Ex e as per EN 60079-7 for Category 2 and 3 or Zone 1 and 2 mains operation

Nameplate 2

- Increased safety level Ex t as per EN 60079-31 for Category 3 or Zone 22 mains operation or operation with frequency converter

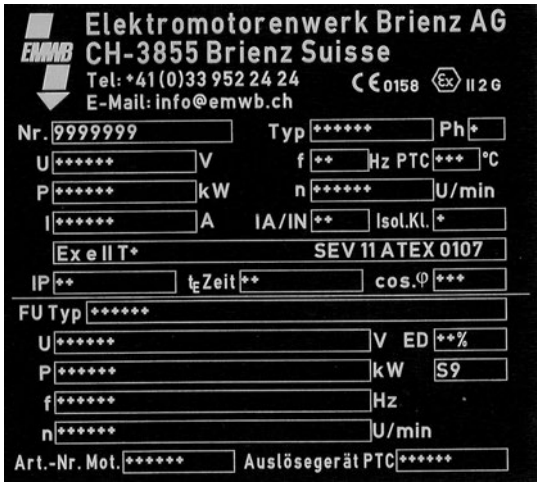

Nameplate 3

- Increased safety level Ex e as per EN 60079-7 for Category 2 and 3 or Zone 1 and 2 operation with frequency converter

Nameplate 4

- Increased safety level Ex e as per EN 60079-7 for Category 2 and 3 or Zone 1 and 2 operation or
- Protection by casing Ex t as per EN 60079-31 for Category 3 or Zone 22 operation with frequency converter

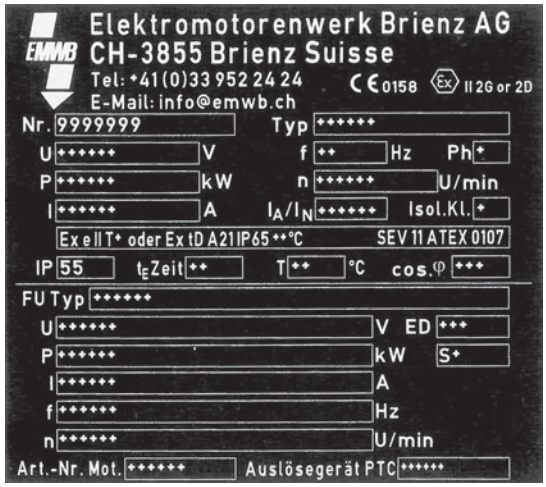

Nameplate 5

- Increased safety level Ex e as per EN 60079-7 for Category 2 and 3 or Zone 1 and 2 operation or
- Protection by casing Ex t as per EN 60079-31 for Category 2 and 3 or Zone 21 and 22 operation with frequency converter

14.3 Repairs and modifications plate

If repairs are not carried out by the manufacturer then they must only be carried out by a workshop that can prove that is has expert knowledge of the repair and maintenance of ex-protected drives. EMWB is a recognised inspection authority of an accredited company and can train repairs workshops.

A written declaration of the work that has been carried out must be submitted on delivery of a repaired motor.

Furthermore, the motor must have an additional plate with the following details on it:

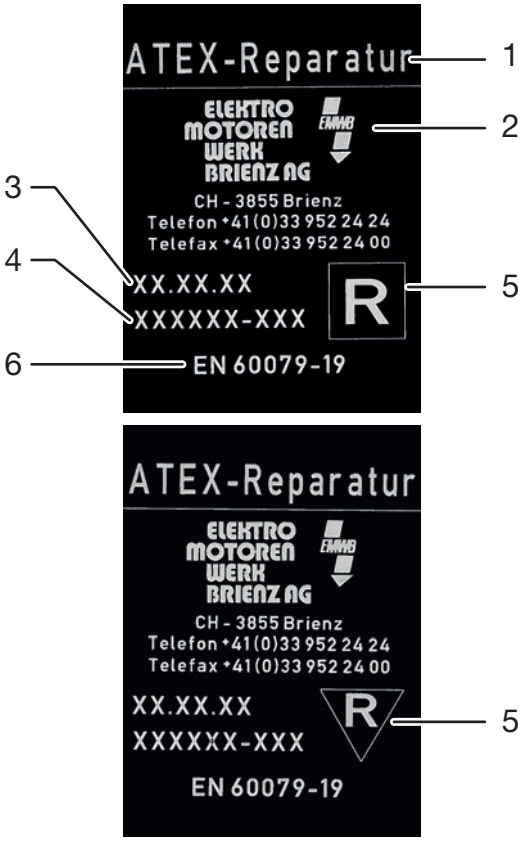

Repairs plate

1 Note on repairs
2 Name and address of the repairs workshop
3 Date of repairs
4 Consecutive repairs number
5 Symbols:
for repairs

for modifications

6 Note on EN number

14.4 Assembly and erection

- In areas exposed to explosion hazards, additional regulations and instructions apply. These must be observed compliant with ATEX 137.
- Only use explosion-protected motors in appropriate areas/zones in accordance with Directive 1999/92/EC.
- When erecting electrical installations in areas exposed to explosion hazards, observe EN/IEC 60079-14 and the appropriate national regulations.

14.5 Electrical connection

⚠ WARNING!

Motors have live elements - risk of electrical shock!

Have all work carried out only by qualified experts when the motor is at standstill.

Switch off (deenergize) the motor and take effective measures to prevent reconnection. This also applies to any auxiliary circuits.

Make sure the motor is de-energized.

Before commencing work, establish a protective conductor connection.

Deviations in the power supply from the rated values for voltage, frequency, wave form, and symmetry increase the level of heating and influence electromagnetic compatibility.

The electrical connection is different from that of standard motors as follows:

- For motors in Zone 1 and 2 (2G or 3G), the electrical connections must be secured against twisting.
- Observe range A in EN/IEC 60034-1 (deviation of ±5 % in voltage or ±2 % in frequency, wave form, mains symmetry), so that the warming is kept within the permissible limits.
- Larger deviations from those of the ratings may result in impermissible increases in the heating of the motors. They must be indicated on the rating plate.
- Protect the motor in all phases from an impermissible rise in temperature in increased safety "e" degree of protection in accordance with EN/IEC 60079-14 using a current-dependent delayed circuit breaker with phase failure protection and asymmetry detection as per EN/IEC 6094, or a similar device.
- Select the overcurrent device with current-dependent, delayed triggering for motors in increased safety "e" degree of protection in such a way that the triggering time, which is taken from the curve of the switch for the ratio between the pull-in current IA and the rated current (nominal current) IN of the motor to be protected, is not longer than heating time tE of the motor. Ratio IA / IN as well as heating time tE are located on the name plate. Set the protection device to the rated current. Use a triggering device that is approved as per RL 2014/34/EU (ATEX Guideline).
- The protection device for motors with increased safety "e" type of protection must switch-off when the wheels are blocked within the time t_E indicated for the respective temperature class. Motors for heavy-duty starting must be protected (startup time > 1.7 x tE-time) by a startup monitoring circuit as per the specifications of the EC type approval certificate.

  Thermal protection of the machine by direct temperature monitoring of the winding is per-

mitted if this has been approved and is indicated on the rating plate.

- For multiple-speed motors, separate, mutually locked protection devices are required for each speed step. Equipment with EC type approval certificate is recommended.

The cable glands must have an EC type approval certificate and be approved for the EX zone in question.

- Any unused openings must be closed using approved plugs.
- Observe the manufacturer's instructions when mounting the cable glands.

14.5.1 Cable glands on Ex-protected motors

The cable glands must have an EC type approval certificate and be approved for the EX zone in question.

- Any unused openings must be closed using approved plugs.
- Observe the manufacturer's instructions when mounting the cable glands.
- Remove the dust caps or sealing plugs delivered with the motor from the cable gland before mounting the line.

14.5.2 Connecting the ground conductor

Grounding conductors are obligatory for safety reasons and must only be connected to their specially marked terminal!

The ground-conductor cross-section of the motor must comply with EN IEC 60079-0.

The installation regulations, e.g. according to EN/IEC 60204-1, must also be observed.

There are two fundamental ways of connecting a ground conductor to the motor:

- Internal grounding with connection in the junction box at the intended and correspondingly marked location.
- External grounding with connection at the stator at the intended and correspondingly marked locations.

14.5.3 Ground cross sections

For motors used in explosion-protection areas, the following minimum cross sections must be used for the PE conductor in accordance with DIN EN 60079-0:2009:

Cross-section area of phase-conductor of the installation, s[mm^2]	Minimum cross sections of concomitant PE-conductor, Sp [mm^2]
s ≤ 16	s
16 < s ≤ 35	16
s > 35	0.5s

Additionally, potential-equalization connecting parts on the outside of the electrical device must be suitable for connecting a conductor with a minimum cross-section area of 4 mm^2. If these connecting parts are also to be used as a PE connection, then the requirements in accordance with the table above must be met.

14.5.4 Concluding measures

Before closing the junction box, make sure that:

- the clearance for ex-protected motors (exception: Zone 22 motors) between non-insulated parts is adhered to: ≥ 10 mm up to 690 V.
- the minimum creep distance for ex-protected motors (exception: Zone 22 motors) between non-insulated parts is adhered to: ≥ 12 mm up to 690 V.

14.6 Commissioning of liquid-cooled ex-protected motors

After installation or modifications, the following measures are recommended for a normal startup of motors:

- Start up the motor without a load; to do this, close the circuit breaker but do not prematurely switch off.
- If the speed is even slower, or to check the direction of rotation, or to make a general check, limit the startup-shutdowns to the minimum number absolutely necessary.
- Allow the motor to run down before switching back on.

14.7 Operating Ex-protected motors

14.7.1 Safety instructions

⚠ DANGER!

Risk of explosion! This electrical equipment is not suitable for an explosive environment. Death, severe bodily injuries and damage to property may result!

Increased safety "e", non-sparking model "nA" and for Zone 2 in areas exposed to explosion hazards may only be used in accordance with the stipulations of the appropriate regulatory authority. It is their job to determine the explosion hazard (classification of hazardous areas/ zones). The dust-layer height for Zone 21 and Zone 22 motors must not exceed max. 5 mm!

- If no other specifications are made in the EC type approval certificate or on the rating plate with regard to duty type and tolerance, then motors have been designed for continuous operation and normal, non-frequent repetitive startups in which there is no significant starting temperature rise. These motors may only be used for the duty type indicated on the rating plate.
- Measures to adhere to the temperature class:

  In S1 mains operation (see Electrical configuration document), a protective device that has been checked for correct function and is current-independent and that monitors all three outer conductors is all that is required to protect the motors. This protective device must be set to the rated current. Multiple-speed motors require a protective device for each number of poles.

14.7.2 Cleaning

To ensure perfect motor cooling, the air paths (air grids, ducts, cooling fins, tubes) must be kept free of dirt and contamination.

⚠ DANGER!

It is forbidden to clean the motors in an explosive atmosphere. Death, severe bodily injuries and damage to property may result.

Surfaces can statically discharge and trigger discharges that can result in ignitions.

14.8 Operation at the frequency converter

14.8.1 General

The motor must be approved by the manufacturer for operation at the frequency converter.

The operating instructions of the frequency converter must be observed. The frequency converter must be approved for the appropriate output and voltage.

The appropriate standards must be observed (mandatory) for operation with a frequency converter.

14.8.2 Motors to be fed by frequency converter with alternating frequency and voltage

Standard / Section	Type of ignition protection	Requirements
EN 60079-0 EN 60079-7 Section 5.2.4.6 EN 60079-14 Section 11.2.4	Increased Safety **„e“**	Must be checked as a unit using the frequency converter described in the documents.
EN 60079-15 Section 17.8.2 EN 60079-14 Section 14.4	Non-sparking **„nA“**	Must be checked as a unit using the frequency converter described in the documents.
EN 60079-31	Device dust-explosion control by casing "t".	Do not have to be checked as a unit using the frequency converter described in the documents if an overcurrent protection device also ensures thermal protection. The overcurrent protection device must not be more than 170% of the highest rated current.

14.8.3 Safety switch-off when operating with a frequency converter

The safety switch-off of the unit (motor and frequency converter) must be ensured by disconnecting all phases from the network, depending on the correctly-set safety-relevant frequency converter parameter and the PTC thermistor installed in the motor. There must be an EC type approval certificate for the triggering device of the PTC thermistor. This prevents a non-permitted violation (overshoot) of the threshold temperatures.

14.9 Repairs

Preparation and instructions for Ex-protected motors

- Only have repairs done by an authorised workshop.
- Only have repairs and overhauls on motors for areas at risk of gas explosion carried out by authorised expert personnel.
- During repairs and overhauls on motors for use with combustible dust, observe the regulations in accordance with EN/IEC 61241-17 (Electrical apparatus for use in the presence of combustible dust - Part 17: Inspection and maintenance of electrical installations in hazardous areas)!

⚠ NOTICE!

Repairs and overhauls on motors for areas at risk of gas explosion must be carried out taking into consideration the appropriate standards.

14.9.1 Repainting

⚠ WARNING!

Risk of explosion due to improper painting. Death, severe bodily injuries and damage to property may result!

When the paint layer is too thick, it can electrostatically charge. A discharge may occur. There is also a risk of explosion when explosive mixtures are present at this moment.

If painted surfaces are repainted, one of the following requirements must be met:

- Limit the total thickness of the paint layer according to the explosion group:
  - IIA, IIB: total thickness of the paint layer maximum 2 mm.
  - IIC: total thickness of the paint layer maximum 0.20 mm for Group II (gas) motors.
- Limit the surface resistance of the paint used:
  - IIA, IIB, IIC, III: surface resistance maximum 1 GOhm from Group II and III (gas and dust) motors.
- Disruptive voltage maximum 4 kV for explosion group III (only dust).

15 Liquid-cooled permanent magnet synchronous motors/generators

15.1 Use of permanent magnet synchronous motors/generators

The permanent magnet synchronous motors can not be operated directly at the mains supply. A frequency converter must be used to operate them. There is a difference between motor-driven operation and operation by generator.

15.2 Motor-driven operation

A suitable frequency converter for permanent magnet synchronous motors is required for motor-driven operation. This must work according to the field-oriented control (FOC) method.

For other control methods, no guarantee is provided for the permissible heating and power output.

If the permanent magnet synchronous motor is operated in a field weakening range, the increased terminal voltage must be carefully observed. This could be higher than the mains voltage connection.

15.3 Operation by generator

If the shaft is driven, a voltage proportional to the speed is induced and taken off at the motor terminals. For isolated operation, the consumer can be connected directly or via load regulation equipment.

Inverters that accord to the legal regulations must be used for feeding in the public network.

15.4 Safety instructions

Permanent magnet synchronous motor are not suitable to be directly switched on at the network. They must be operated using a frequency converter suitable for permanent magnet synchronous motors. In case of doubt, consult the manufacturers of both components.

Permanent magnet synchronous motors/generators disperse stray fields both during their assembly and their disassembly.

The rotors can disturb or destroy other electronic devices and components. This applies in particular to pacemakers, mobile electronic devices and magnetic strip cards.

Additional safety regulations apply to permanent magnet synchronous motors/generators fed by frequency converters. This means that even when there is a complete separation of the electrical connections at the stator terminals, dangerous voltages can nevertheless occur. It must be ensured that before opening the terminal box, rotation of the shaft is effectively prevented.

Reverse polarity voltages my occur when working at the feed line. Voltages may still occur at the terminals during standstill of the rotor when feeding the permanent magnet synchronous motors by frequency converter. Overloading permanent magnet synchronous motors may result in demagnetisation processes and destroy the winding.

The rotor must only be disassembled with tools specially designed for this purpose. Nonobservance of this regulation may result in severe injuries to persons and damage to property.

Persons with pacemakers are at risk when in the vicinity of disassembled rotors excited by permanent magnets.

15.5 Maintenance

Notice is once more explicitly given to the safety instructions, and especially to the requirement to isolate the equipment, secure it against being switched back on, and to check that all parts connected by a voltage source are deenergized.

The instructions described in the first chapters also apply.

16 Technical data

The specific technical data can be found in the shop papers; these are enclosed with every delivery.

17 Glossary

AC	Alternating current
ATEX	ATEX is a synonym for the ATEX Directive of the European Union. The directive currently includes two regulations regarding explosion protection, namely the ATEX Product Directive 2014/34/EU and the ATEX Operational Directive 1999/92/EC.
BG	Overall size
CE	CE Mark
CSA C.US	Canadian Standard Association
DC	Direct current
DH / °d	German hardness grade
°e	English hardness grade
EMC	Electromagnetic compatibility
Ex	Identifies explosion-protected production facilities
Explosions protection class	Devices and production facilities may only be operated in an explosive atmosphere when the maximum surface temperatures remain below the ignition temperature of the surrounding explosive mixture. Temperature classes are defined to easily assess this; devices are divided within these classes according to their maximum reachable temperatures.
°f	French hardness grade
°fH	Total hardness of cooling medium
Half key balancing	Balanced with half key
IEC	International Electrotechnical Commission
IP	Type of protection
Insulation resistance	The insulation resistance is the ohm resistance component between electrical conductors, or to the ground potential.
Class of insulation	An insulation class characterises or specifies insulating material (e.g. insulating varnish of enamelled copper wire, the slot insulation of motors) with respect to their maximum working temperature. The insulation materials are divided in accordance with their heat resistance into thermal classes with various threshold temperatures.
PTC resistors	PTC resistors are conductive materials that are more able to conduct the current at low temperatures than at high ones. Their electrical resistance increases as the temperature increases.
KTY	Temperature sensors (silizium sensors)
M_B	Braking torque
M_N	Motor torque
mol/m^3 mmol/l	Total hardness of cooling medium
Nm	Torque
n_{max}	Limit speed
NTC	NTC resistors (negative Temperature Coefficient Thermistors)
PE conductor	Protective earth
P_N	Rated power
ppm	American hardness grade
PT 100	PT 100 sensors (react very sensitively and quickly to temperature changes)
PTC	PTC temperature probe (temperature-dependent resistors)
Ra	Roughness values (surface quality)
Ri	Insulation resistance (MOhm)

Switching contact NOC/NCC	Bimetal temperature protection
Oscillating quantities Level A	Normal - without any special oscillation requirements
t_E	Heating time of the motor
U	Voltage
UL	Underwriters Laboratories
U_N	Rated insulation voltage
Full-key balancing	Balanced with full key
Heating class F	Use of threshold temperature is at 155 °C
Balancing	Non-balanced rotating parts of motors generate vibrations during operation; these vibrations may damage the motor when the component is above a certain size. Balancing of rotating parts reduces these vibrations to a non-critical level for the components.
Zone 1	Atmosphere: Gas; hazard level: occasional danger; type of protection: increased safety "e" + pressure-resistant casing "d"
Zone 2	Atmosphere: Gas; hazard level: rare and temporary danger; type of protection: non sparking "n"
Zone 21	Atmosphere: Dust ; hazard level: occasional danger; type of protection: protected by casing "t"; device protection level "Db"
Zone 22	Atmosphere: Dust ; hazard level: rare and temporary danger; type of protection: protected by casing "t"; device protection level "Dc"
Type of ignition protection	The type of ignition protection is a designation from explosion protection that stands for the various design principles in this area.